SIEMENS

VIDEO – RECORDER

FM 608 Q4 K4

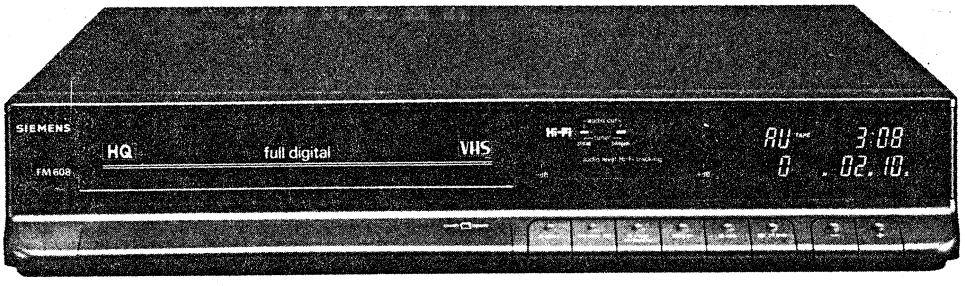

Schaltpläne + Platinen

Circuit diagram + printed circuit boards

Ausgabe 832
Issue

Änderungen vorbehalten
Subject to modifications

Ident-Nr. 53 5287

Inhaltsverzeichnis / Table of contents — FM 608 Q4 K4

		Ident. Nr. / Parts No.	Seite / Page
Blockschaltplan Over all wiring diagram		—	
SY - A CP - A	Ablaufsteuerung System control	75 5292 [1] 75 5439 [2]	3, 23–26
SV - A CP - A	Servo Servo	75 5292 [1] 75 5439 [2]	3–4, 23–24, 26–28
VP - 1	Video - Kopfverstärker Audio pre amp	75 5304	5–6, 20 15–16, 30–32
VD - 1	Video	75 5296	7–8, 17–19, 23
VD - 2	Pal / Secam - Decoder	75 5297	18–19
AD - 1	Audio	75 5307	14–15, 29, 32
AD - 2	Audio	75 5308	13–16, 30–32
CP - A	EURO - AV incl. VD - A, AD - A, CV - A, DM - A	75 5292 [1] 75 5239 [2]	21–24
SY - 2	Autom. Spurnachführung, Restspielzeitkontrolle Auto tracking, tape remain	75 5243	25–27
MC - 2 MC 1 - 4	Adapter Mechanism connection	—	11–12
TN - A CP - A	TN - Adapter TN connection	—	33
TN - 1	ZF / IF	75 5558	33–34
TN - 3	Stereo - Decoder	75 5295	34–35
TN - 4	PLL	75 5245	34–35
	Modulator RF - Converter	75 5207	35
TB - 1	Buchsenplatte Socket board	75 5293	36
TB - 3	Buchsenplatte Socket board	—	54
DM - 1, 2 3, 4	Digital Blockschaltplan	—	9–11
DM - 1	Analog / Digital - Video	75 5462	37–38, 41–43
DM - 2	Secam - Chroma Decoder / Encoder	75 5303	39–40, 44
DM - 3	Digital - Speicher (Memory)	75 5301	45–46, 49
DM - 4	Digital - Speicher (Memory control)	75 5463	47–48, 50
DM - 5	Digital - Schalter (Switch)	75 5298	22–23
	IR - Geber IR Remote control	75 5288	50
PW - A CP - A	Spannungsversorgung Power supply	—	51, 23–24
PW - 1 2, 3	Netzteil Power supply	—	51–52
TM - 1	Bedienteil, Anzeige, Timer Tuning control, Timer, Display	75 5299	53–56
TM - 2	Schalterplatte Switch board	75 5300	54
TM - 3	Synchrontrennung, IR - Empf. VPS Synchr. sep., IR receiver, VPS	75 5247 [1] 75 5249 [2]	55
TM - A CP - A	Abstimmung Tuning select	—	56

[1] FM 608 Q4
[2] FM 608 K4

Zur Beachtung!

Alle Bauteile, die in den Listen mit dem Symbol „⚠" gekennzeichnet sind, haben für die elektrische Sicherheit des Gerätes eine besondere Bedeutung.
Verwenden Sie beim Austausch dieser Teile immer das Original-Ersatzteil laut Ersatzteilliste.
Technische Daten dieser Teile müssen unbedingt eingehalten werden!

Product safety notice

Product safety should be considered when a component replacement is made in any area of a unit. Components indicated by the symbol ⚠ in this schematic diagram show components whose value have special significance to product safety. It is particularly recommended that only parts specified on the attached parts list be used for component replacement designated by the symbol.

Blockschaltplan

OVERALL WIRING DIAGRAM

RF CONVERTER
TUNER
TN-1 IF
TN-4 PLL PACK
TN-3 AUDIO STEREO DECODER
SY-2 AUTO TRACKING & TAPE REMAIN
DM-5 VIDEO SIGNAL SELECT

CP-A
(VD-A, SY-A, AD-A, PW-A, TN-A, SV-A, DM-A, CV-A)

DM-1
DM-2 (FULL ONLY) (SECAM MESECAM)
DM-3
DM-4
AD-1
AD-2
VP-1
PW-1
TM-1
TM-2
TM-3
MC-1
MC-2
MC-3
MC-4
MC-5
TB-1
TB-3
F/E HEAD
V. HEAD
MC
MH
VD-1 VIDEO
VD-2 PAL / SECAM DISCRIMINATION

MECHANISM
LOADING MOTOR
ERACE PREVENTION SWITCH
MECHANISM MODE SWITCH
TAPE-UP REEL SENSOR
SUPPLY REEL SENSOR
DEW SENSOR
TAPE TOP SENSOR
TAPE END LED
TAPE END SENSOR
FL START SW
FL END SW
TO TIMER
SSB CLK
SSB DATA

SYSTEM C
IC301
IC305
LOADING MOTOR DRIVER
INITIALIZE RESET
TAPE REM
IC304
SENSOR AMP

PB C. From VIDEO
DOP IN From VIDEO
From VIDEO FSC(4.43MHZ) IN
COMPOSITE SYNC.

Ablaufsteuerung und Servo

SYSTEM CONTROL AND SERVO BLOCK DIAGRAM

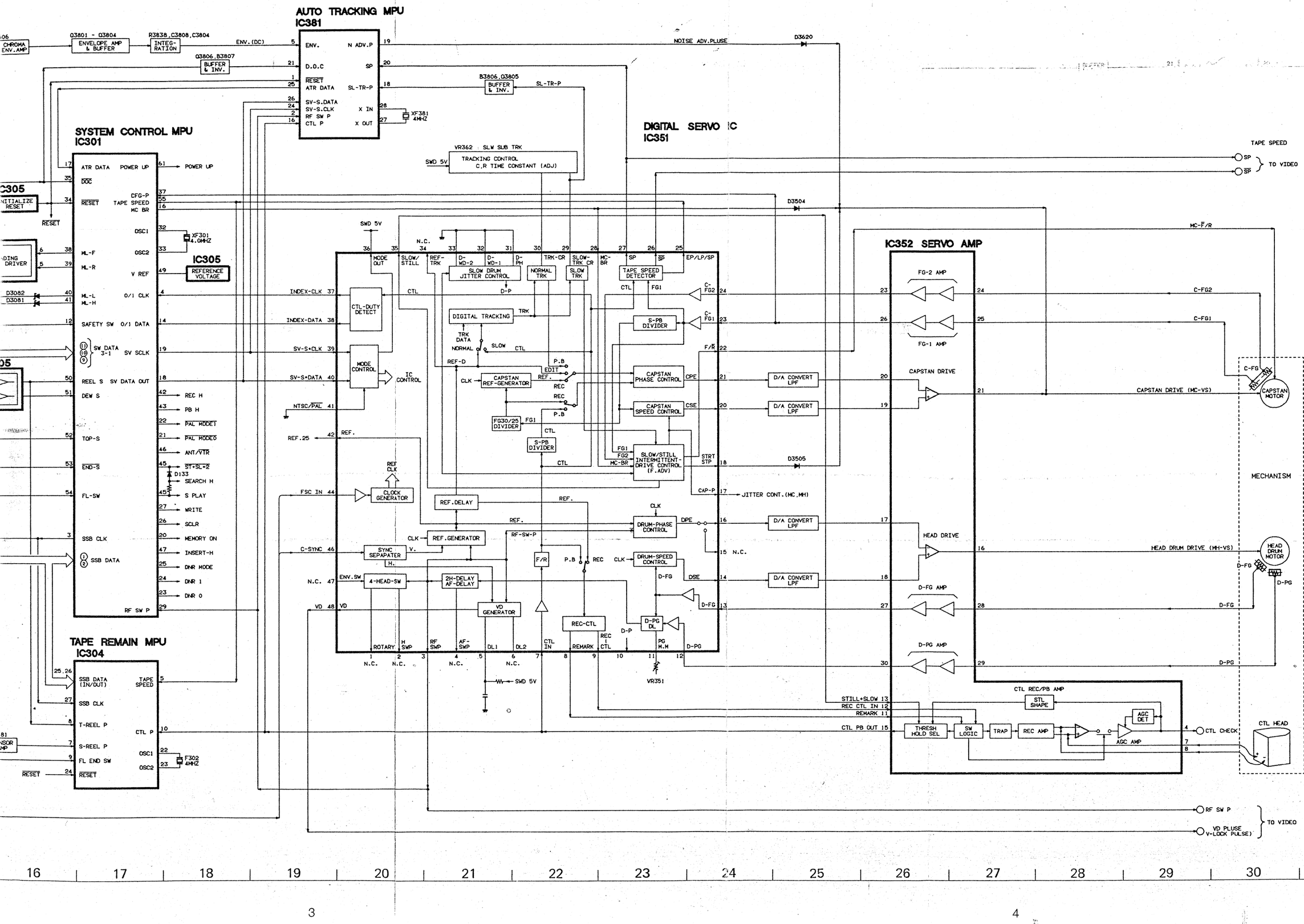

16 17 18 19 20 21 22 23 24 25 26 27 28 29 30 31

VIDEO SIGNAL BLOCK DIAGRAM (VD - A & DM - 5)

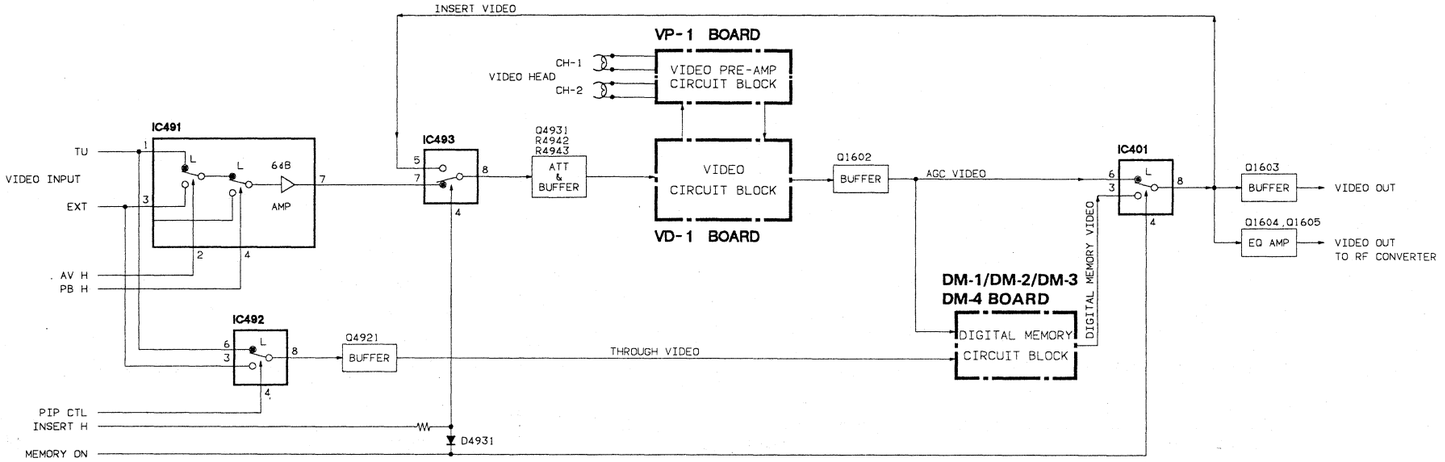

VP-1

IC181 (LA7320) REC/PRE. AMP

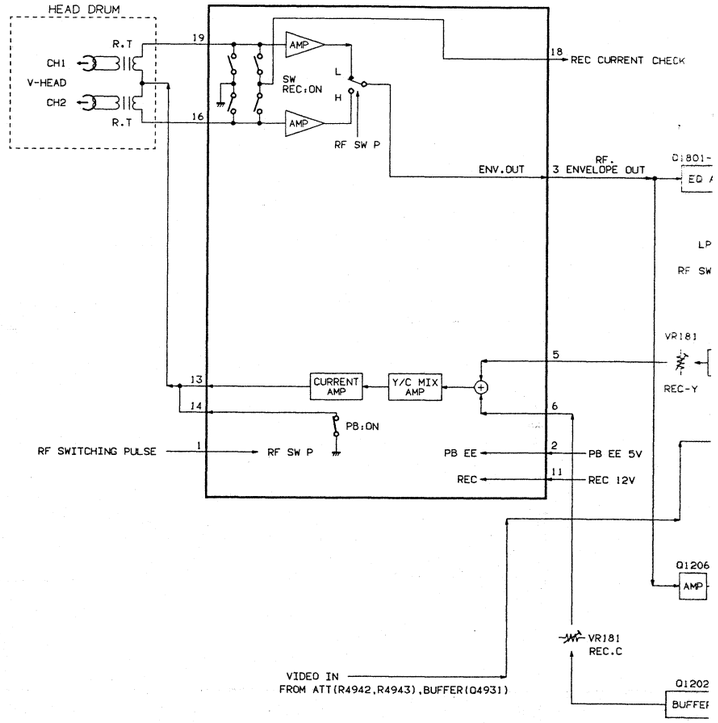

VIDEO BLOCK DIAGRAM

VD-1
IC101 (LA7322N) Y-SIGNAL PROCESS

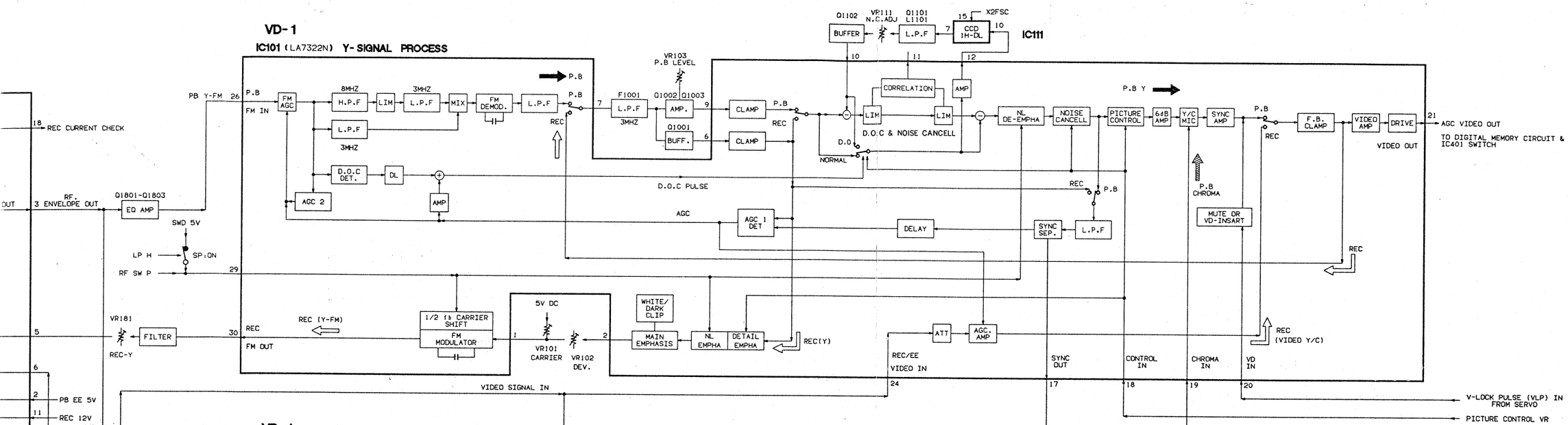

VD-1
IC121 (TA8632N) CHROMA PROCESS

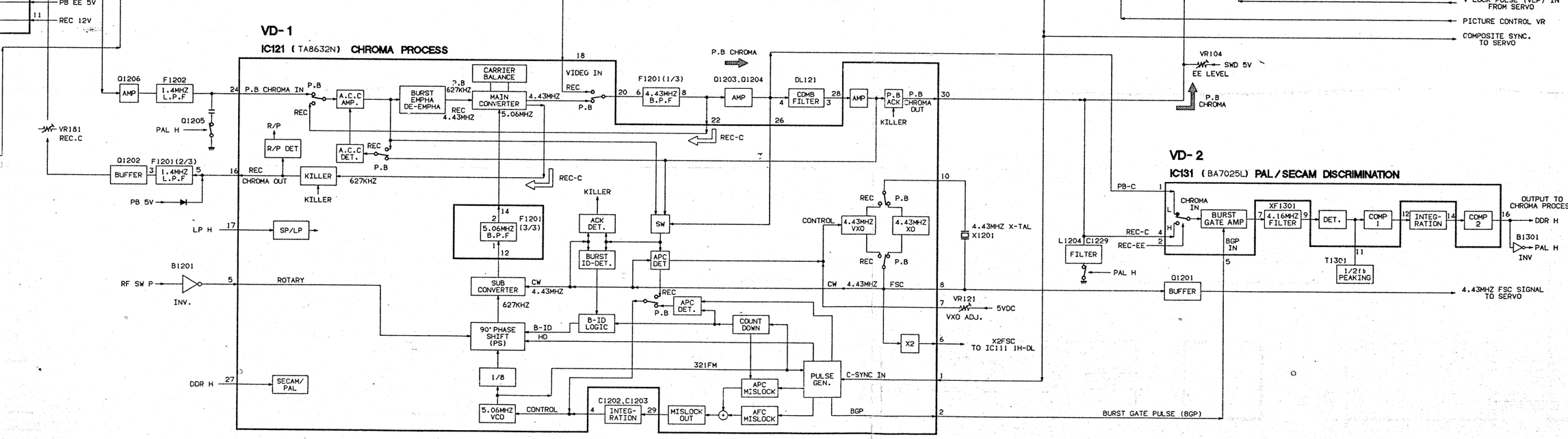

VD-2
IC131 (BA7025L) PAL/SECAM DISCRIMINATION

DIGITAL MEMORY BLOCK DIAGRAM

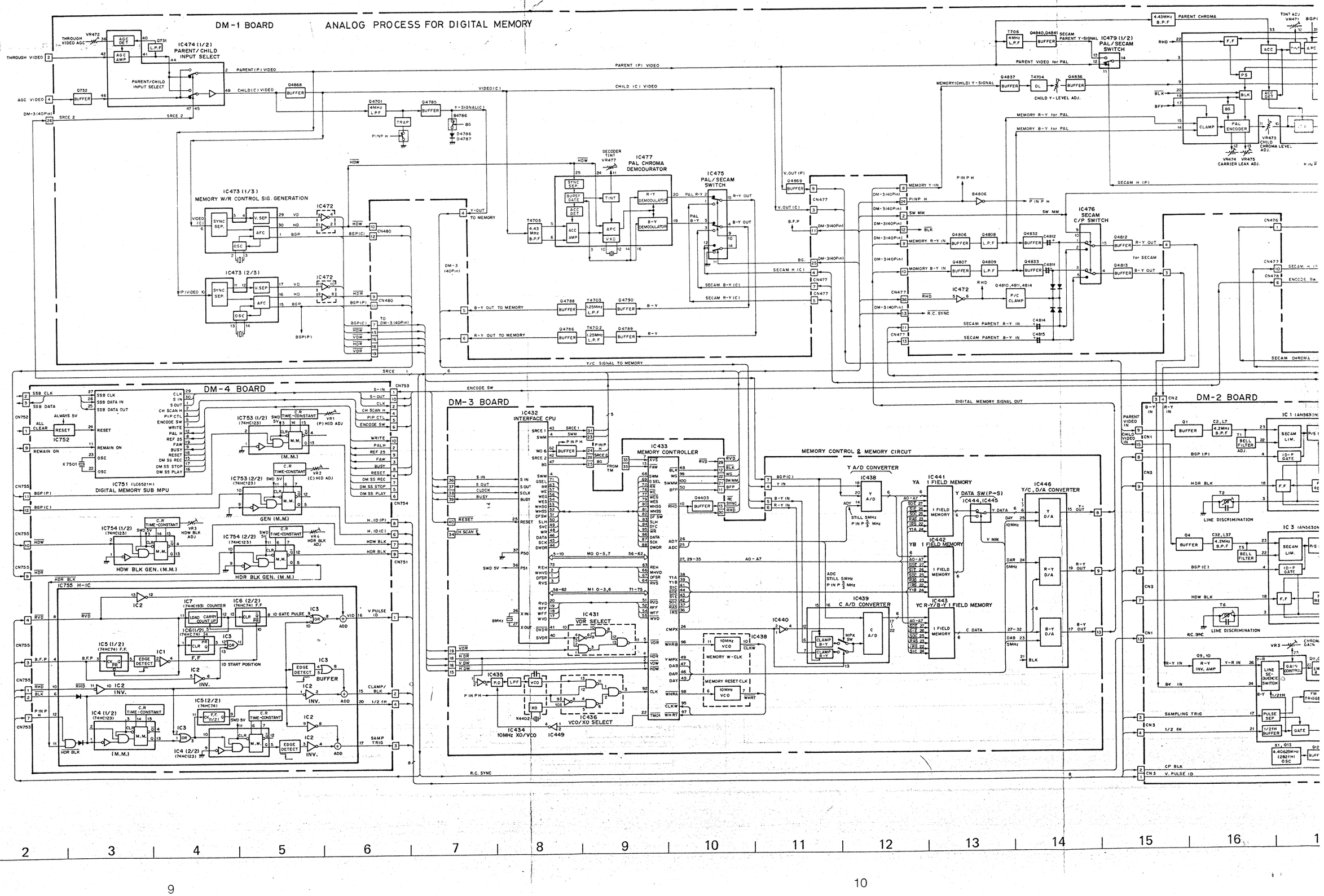

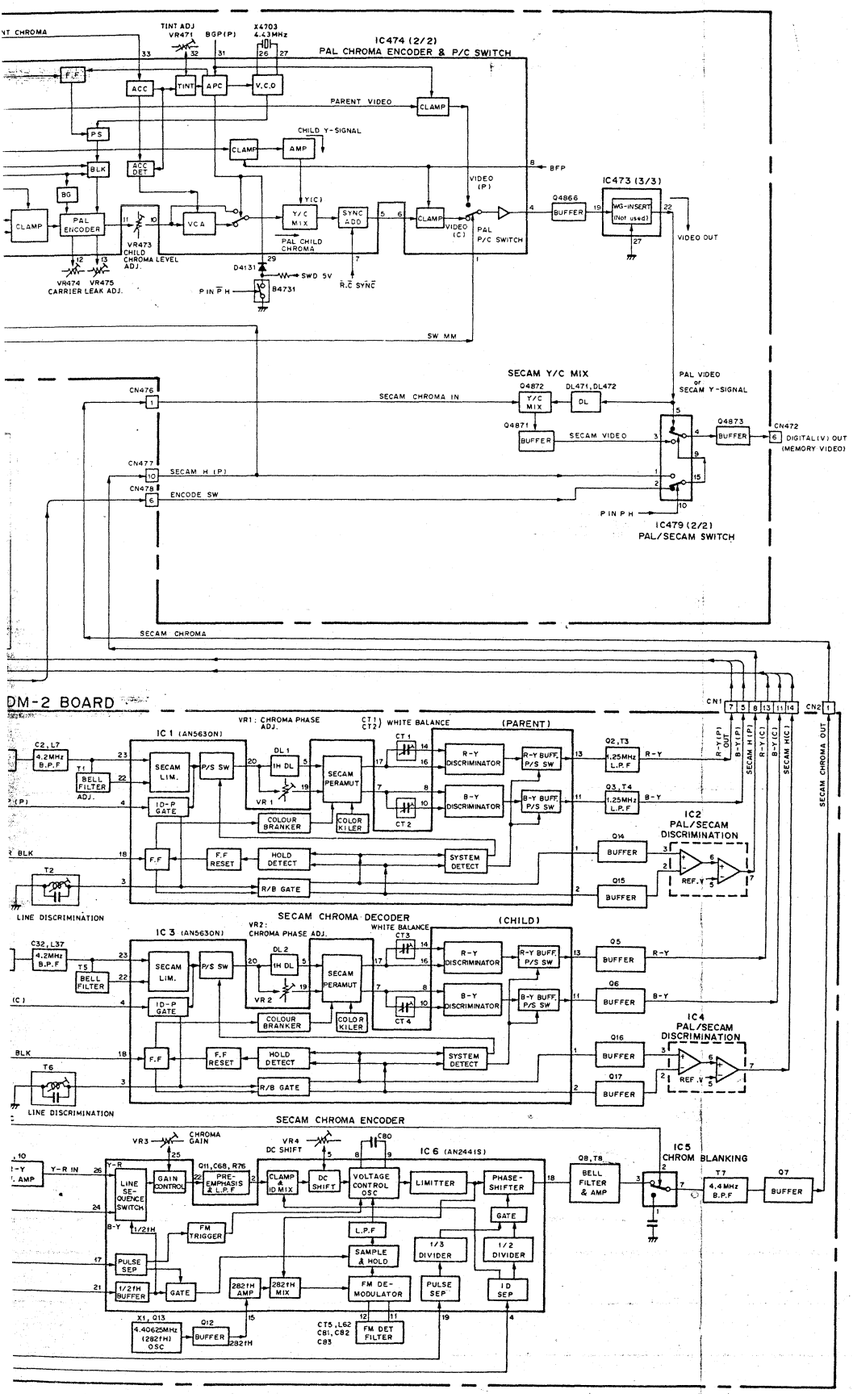

MC-2 Adapter

MECHANISM CONNECTION

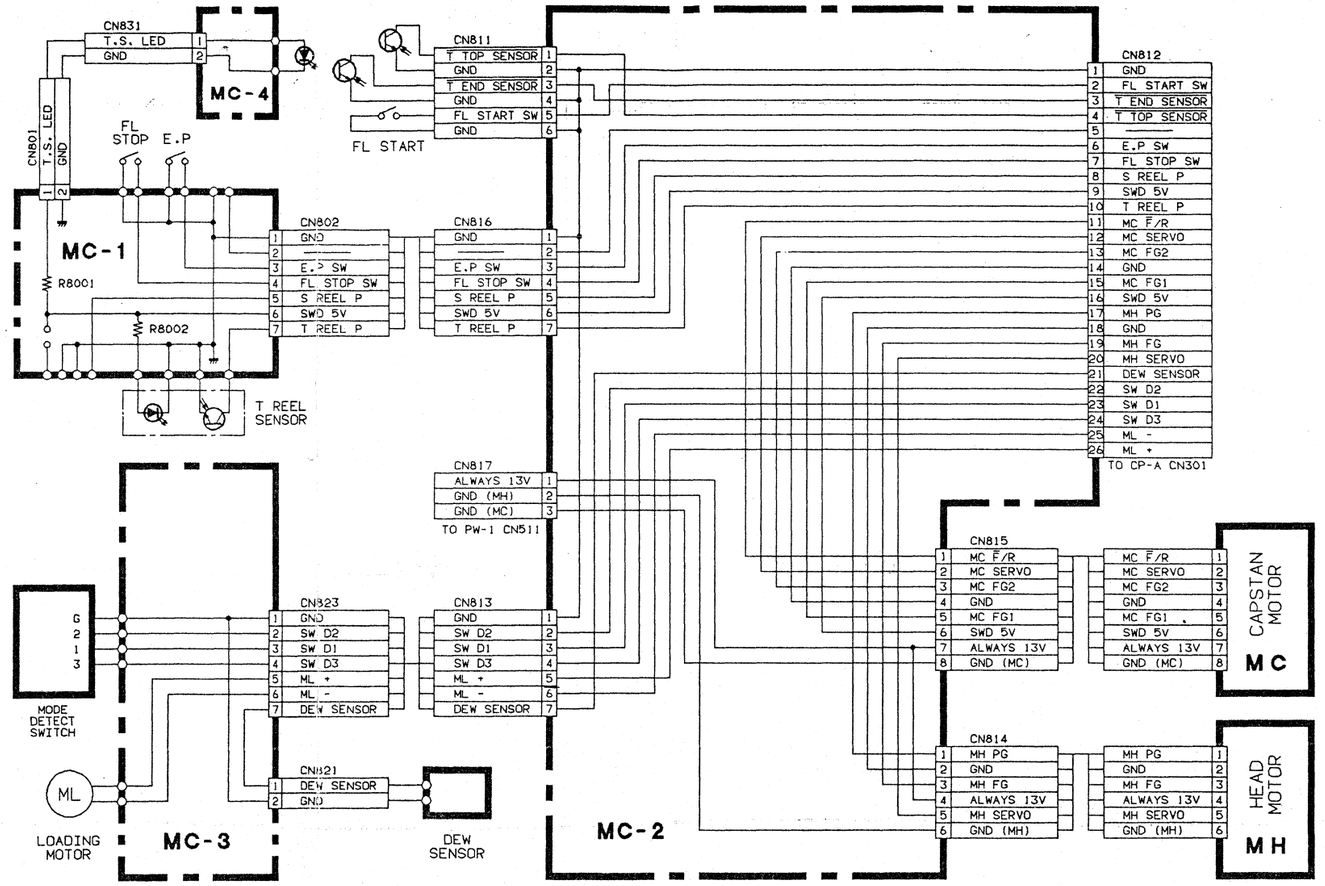

AUDIO BLOCK DIAGRAM

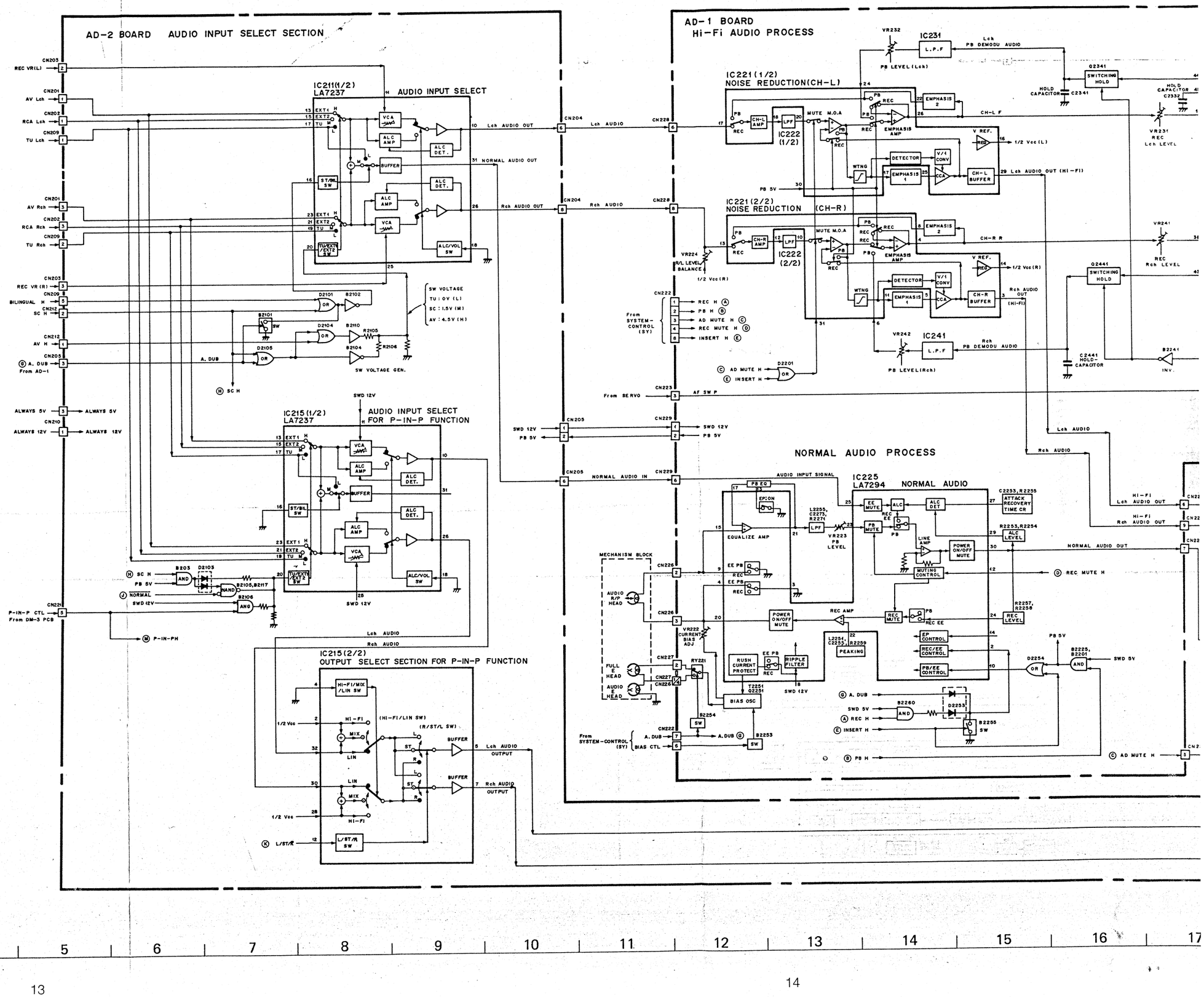

GRAM

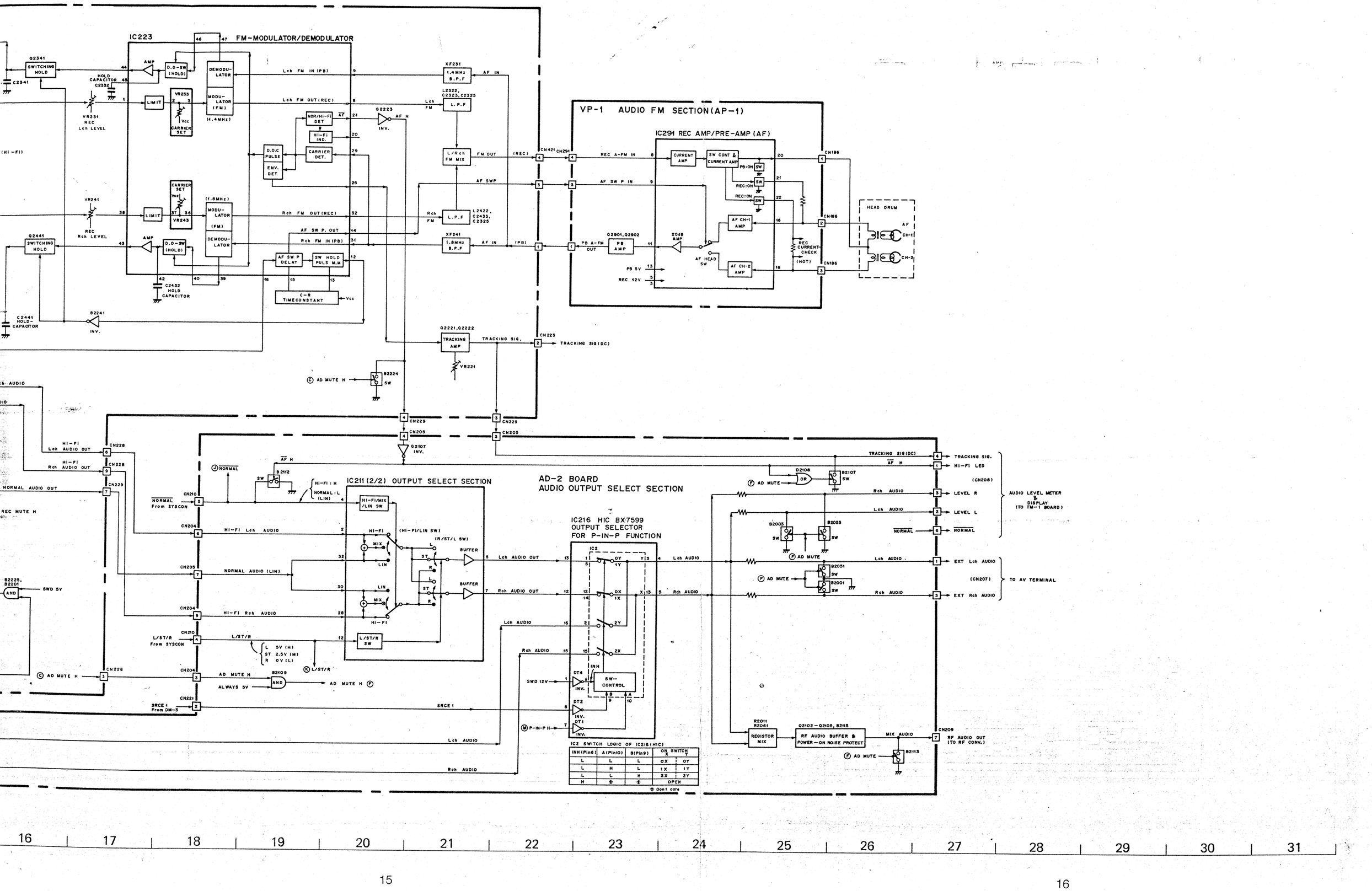

16 17 18 19 20 21 22 23 24 25 26 27 28 29 30 31

VD - 1 VIDEO

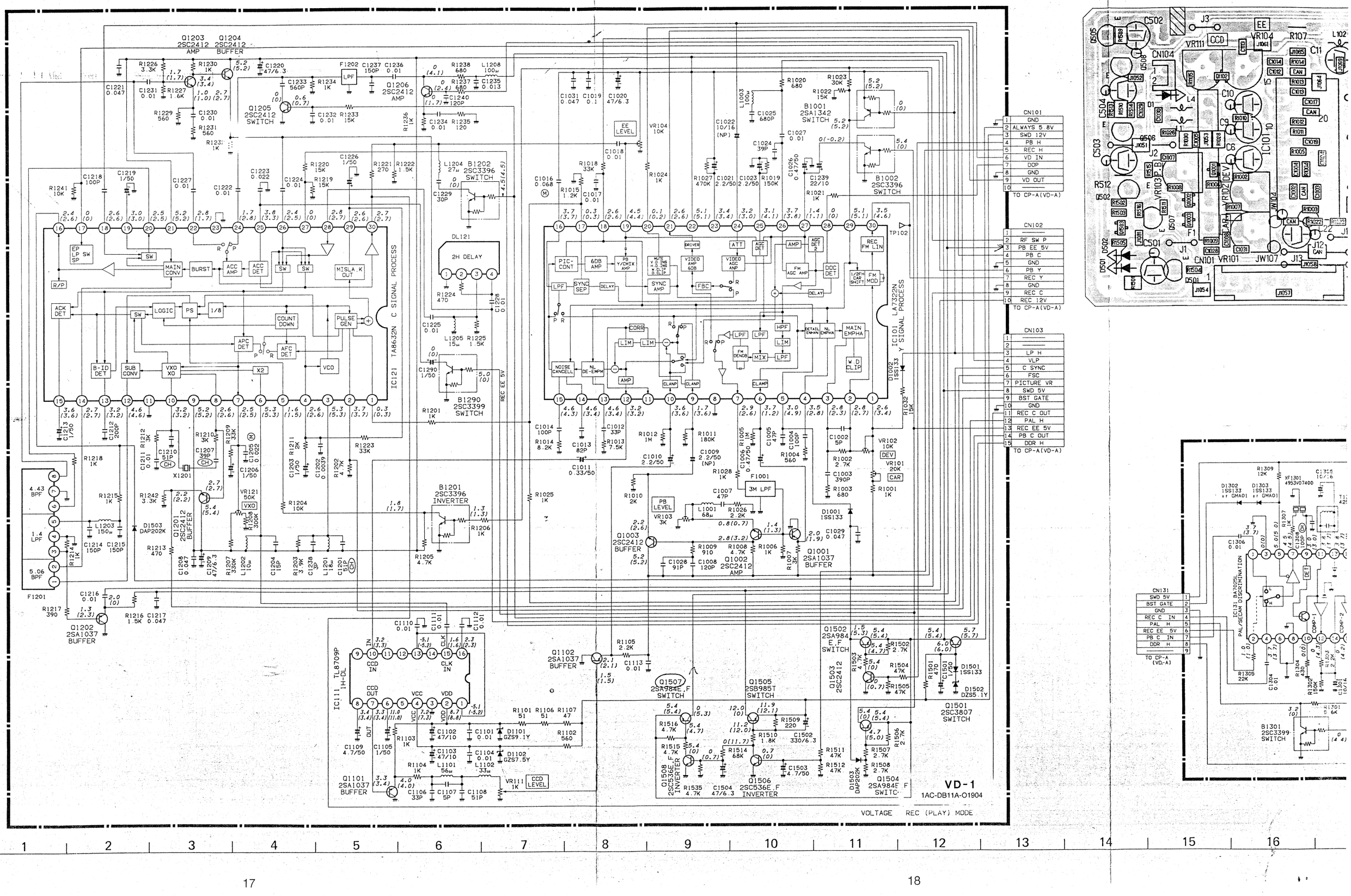
Q1203 2SC2412 AMP
Q1204 2SC2412 BUFFER
Q1205 2SC2412 SWITCH
Q1206 2SC2412 AMP
B1001 2SA1342 SWITCH
B1002 2SC3396 SWITCH
B1201 2SC3396 INVERTER
B1202 2SC3396 SWITCH
B1290 2SC3399 SWITCH
Q1001 2SA1037 BUFFER
Q1002 2SC2412 AMP
Q1003 2SC2412 BUFFER
Q1101 2SA1037 BUFFER
Q1102 2SA1037 BUFFER
Q1201 2SC2412 BUFFER
Q1202 2SA1037 BUFFER
Q1501 2SC3807 SWITCH
Q1502 2SA984 E,F SWITCH
Q1503 2SC2412
Q1504 2SA984F,F SWITCH
Q1505 2SB985T SWITCH
Q1506 2SC536E,F INVERTER
Q1507 2SA984E,F SWITCH
Q1508 2SC536E,F INVERTER
IC101 LA7302N Y SIGNAL PROCESS
IC111 TL8709P 1H-DL
IC121 TA8632N C SIGNAL PROCESS
CN101
CN102
CN103
TO CP-A(VD-A)
CN131
TO CP-A (VD-A)
VD-1
1AC-DB11A-O1904
VOLTAGE REC (PLAY) MODE

VD - 1 VIDEO

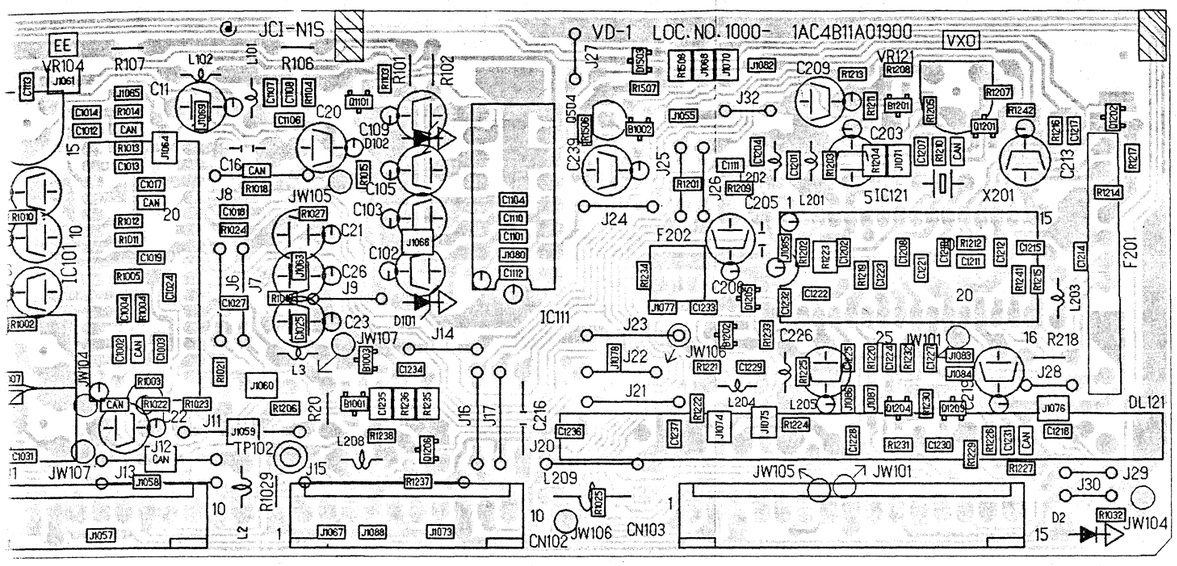

VD - 2 PAL/SECAM DECODER

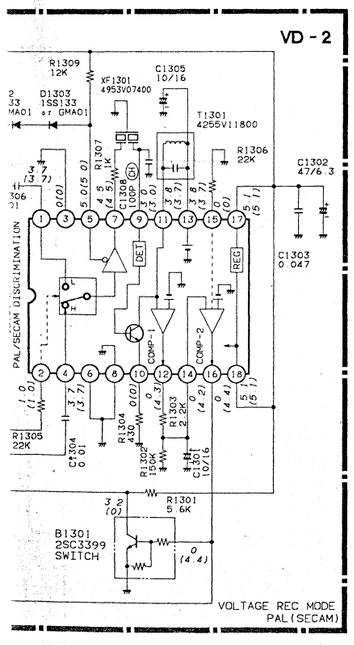

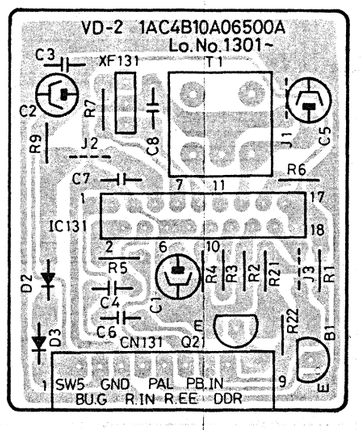

VP - 1 (VP - A) Kopfverstärker
VIDEO PRE - AMP

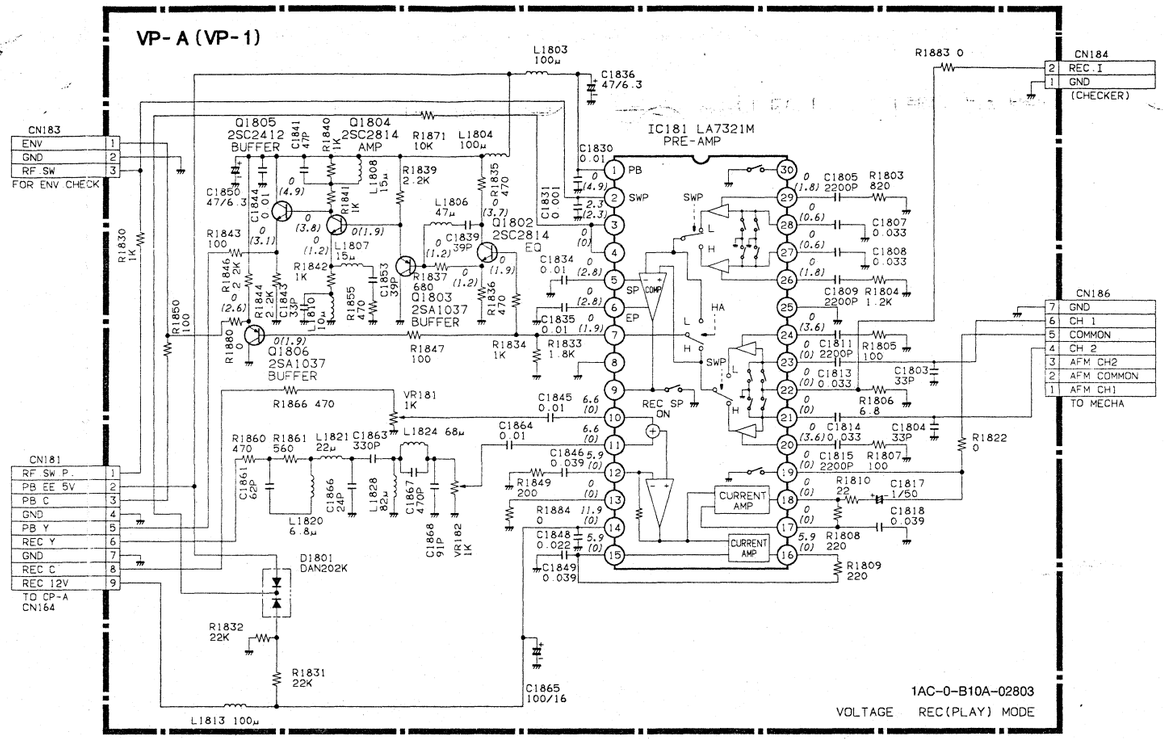

VP - 1 VIDEO AUDIO PRE - AMP

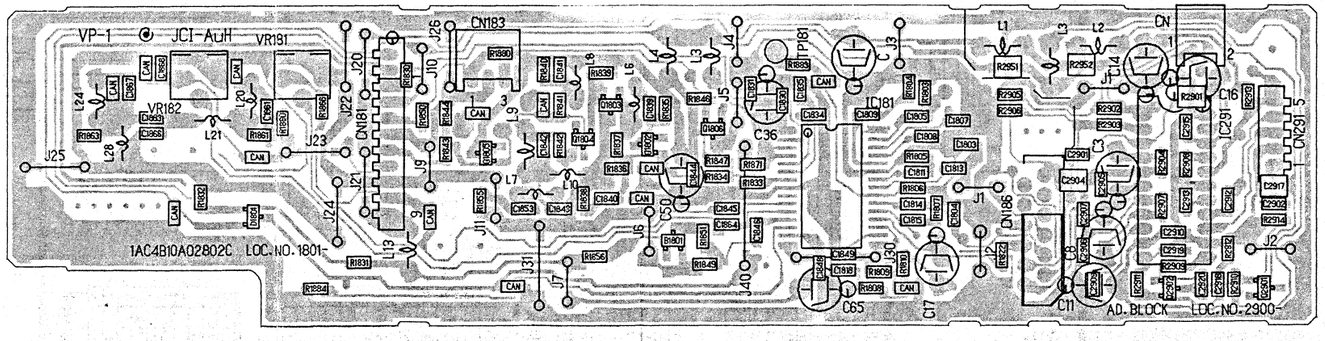

CP - A EURO - AV

VD-A, AD-A, CV-A & DM-A

TO PW-A: SWD 12V, SWD 5V, ALWAYS 5.8V

TO SY-A: PB H, REC H, INSERT H, A-DUB, CH SCAN H

TO SV-A: LP H, RF SW P., ENV., C SYNC, FSC, V.L.P, D.OP — CN255

TO AD-2 CN212 / TO TM-A: AV H, SC H

CN252: PIP H, SRCE 1, PIP CTL — TO AD-2 CN211

CN401: CH SCAN H, THROUGH VD OUT, GND, AGC VD OUT, GND, DIGITAL VD IN, GND — TO DM-1 CN472

CN402: PAL H, PIP. CTL, MEMORY ON, PIP H, SRCE 1 — TO DM-1 CN474

CN164: RF SW P, PB EE 5V, PB C, GND, PB Y, REC Y, GND, REC C, REC 12V — TO VP-1 CN181

TP161 — VIDEO OUT

L1603 100µ; C1604 100/16; C1617 0.01

Q1603 2SA608F BUFFER: R1617 560, R1618 75, D1605 1SS133, D1606 1SS133, C1606 470/6.3

Q1604 2SC536 AMP: R1622 1K, R1620 5.6K, R1619 1.3K, R1621 1.8K, C1608 33P, R1623 820

Q1605 2SA608 BUFFER: R1625 560, L1602 100µ, C1609 39P, R1624 1.8K

B1601 2SC3399 SWITCH: R1610 5.6K, R1611 5.6K, SWD 12V, D1604 1SS133, R1613 56, R1612 22K

Q1601 2SA608 SWITCH: C1612 22/6.3, D1612 1SS133, D1611 1SS133, D4082 1SS133, D4081 1SS133, R1698 5.6K

SWD 5V: R1609 6.2K, D1603 1SS133

PB-N: D1602 1SS133

PIP H: D4051 1SS133, L4011 100µ, C4011 47/6.3, C4012 0.022

IC401 LA7221 SWITCH — TP401

C4013 10/16, R4011 1M, R4012 22K, R4013 10K

CH SCAN H THROUGH VD OUT N/D VIDEO

NORMAL VIDEO

DIGITAL VIDEO: C4014 10/16, R4014 1M

SWD 12V

PAL H, PIP. CTL, MEMORY ON

D4092 1SS133, R4092 10K, R4051 1K

B4091 2SC3399 INVERTER: R5453 3.3K — D4091 1SS133

Q1606 2SC536 BUFFER

VIDEO IN

Q1602 2SA608 BUFFER: R1615 560, R1614 2.7 1.2K — B1602 2SC3399 INVERTER

L1604 100µ; C1614 0.01; C1616 0.01; R1627 1K; R1626 330

B1604 2SC3399 SWITCH: R1631 270, R1630 200, R1629 10K — B1603 2SC3399 SWITCH

D1613 1SS133; D1607 1SS133

TP163; TP162

D1610 1SS133; D1609 1SS133; R1632 100; R1628 10K

C1610 47/16; C1611 0.01

L1607 10µ; C1630 30P

CN101: GND, ALWAYS 5.8V, SWD 12V, PB H, REC H, VIDEO IN, D.O.P, GND, VIDEO OUT

CN102: RF SW P, PB EE 5V, PB C, PB GND, PB Y, REC Y, REC GND, REC C, REC 12V

CN103: L.P H, V.L.P, C. SYNC, FSC, PICTURE VR, SWD 5V, BST GATE, GND, REC C OUT, PAL H, REC EE 5V, PB C OUT, DDR H

CN131: SWD 5V, BST GATE, GND, REC C IN, PAL H, REC EE 5V, PB C IN, DDR H

VD-1 VIDEO

VD-2 MESECAM DETECTOR

VOLTAGE : REC(PLAY) MODE

R1062 75

CN161 (21 PIN)

R2551 2.7K; R2552 2.7K; C2551 470P; C2552 470P; C1603 0.1; C2554 470P; C2553 470P

CN253: AV L CH IN, GND, AV R CH IN — TO AD-2 . CN201

CN852: GND, AD L CH IN, AD R CH IN, GND — TO TB-1

CN254: AD TN L CH OUT, AD TN R CH OUT, GND, LINE MUTE, BILINGUAL H, GND, RF AD IN — TO AD-2 CN209

R2509 820

CN990: VD TN IN, LINE MUTE, AD TN R CH IN, AD TN L CH IN, BILINGUAL H — TO TN-A

AV CONTROL

F2552; R2510 1.8K

RF. VD OUT

L6601 15µ; D6601 DSK10C; L6602 15µ; C6601 100/6.3; C6602 100/6.3

CN990: RF VD OUT, RF AD OUT, SWD 5V, GND, ALWAYS 5V — TO RF CONVERTER

DM-5

IC491 NJM2246D 60B AMP: C4912 0.022, C4911 47/6.3, L4911 100µ

CN491: GND, MUTE, AV H, VD EXT IN, GND, VD TN IN, CH SCAN H, PIP. CTL, THROUGH VD OUT, SWD 5V

R4911 10K; R4913 10K; R4923 10K; R4952 100

C4913 47/6.3; C4914 2.2/50; R4914 47K; R4917 1M; R4916 1M; R4912 47K; D4911 1SS133; D4912 1SS133

CN492: OSD IN, GND, OSD OUT, GND, N/D V IN, GND, INSERT H, MEMORY ON, PB H, EE V OUT, SWD 12V

C4915 0.022

IC492 LA7221 SWITCH: L4921 100µ; C4923 47/6.3; C4924 47/6.3; C4922 0.022; C4921 47/6.3; R4951 470; C4951 0.022

D4921 1SS133; D4922 1SS133; R4922 47K; R4928 1M; R4924 47K; R4929 1M; R4930 10K; R4925 100

Q4921 2SA608 BUFFER

IC493 LA7222 SWITCH

D4931 1SS133; R4945 10K; C4934 47/16; R4935 47K; C4935 47/16; R4942 510

R4936 100; L4931 100µ; R4944 1K; Q4931 2SA608 BUFFER; R4943 510; R4931 47/16; C4932 0.022

Pin No.	
IC101 (2)	
(6)	
(6)	
(9) (10)	
(17)	
(18)	
(26)	
(30)	
TP161 (CP-1)	

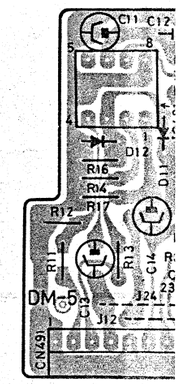

VIDEO

Pin No.		
IC101 (2)	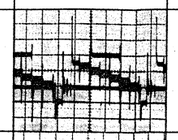	REC 1.2 Vp-p (200 mV/div)
(6)	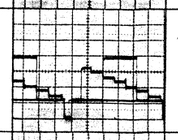	REC 500 m Vp-p (100 mV/div)
(6)	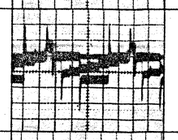	PLAY 300 m Vp-p (100 mV/div)
(9) (10)	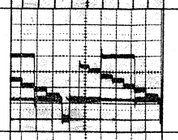	PLAY 500 m Vp-p (100 mV/div)
(17)	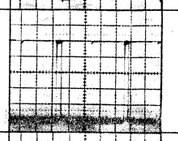	4 Vp-p 15.625 KHz (1 V/div)
(18)	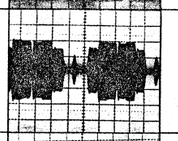	PLAY 320 m Vp-p (100 mV/div)
(26)	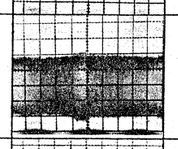	PLAY 400 m Vp-p (100 mV/div)
(30)	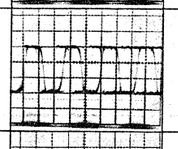	REC 1.5 Vp-p (500 mV/div)
TP161 (CP-1)	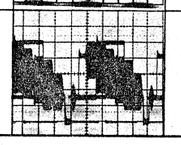	PLAY 1 Vp-p (200 mV/div)

CP - A (VD - A, SY - A, AD - A, PW - A, TN - A, SV - A, DM - A, CV - A)

Lötseite mit IC 351 / PRINT SIDE

Hauptbestückungs- und Printseite / PARTS AND PRINTED SIDE

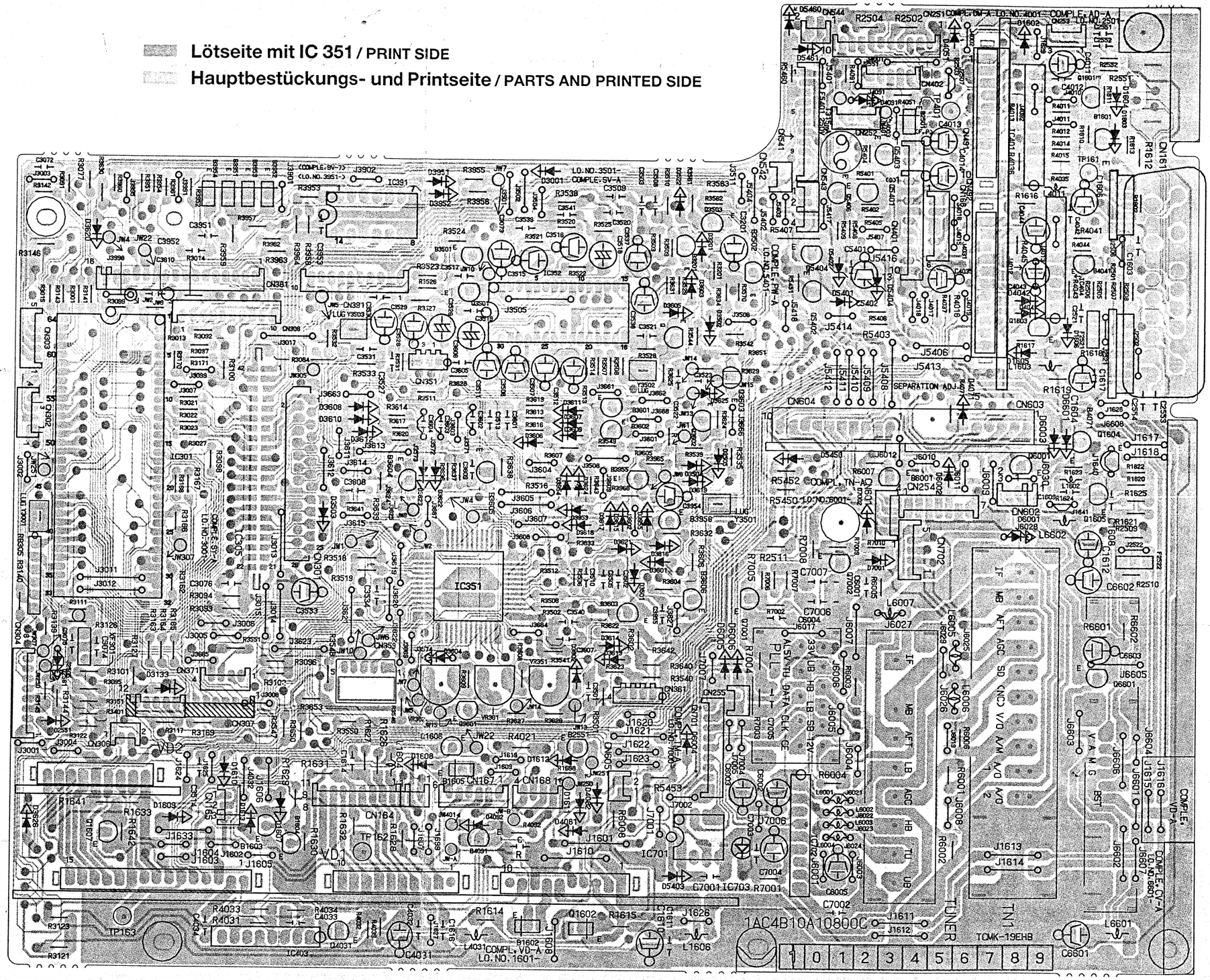

SY-2 Automatische Spurnachführung, Restspielzeitkontrolle
AUTO TRACKING & TAPE REMAIN

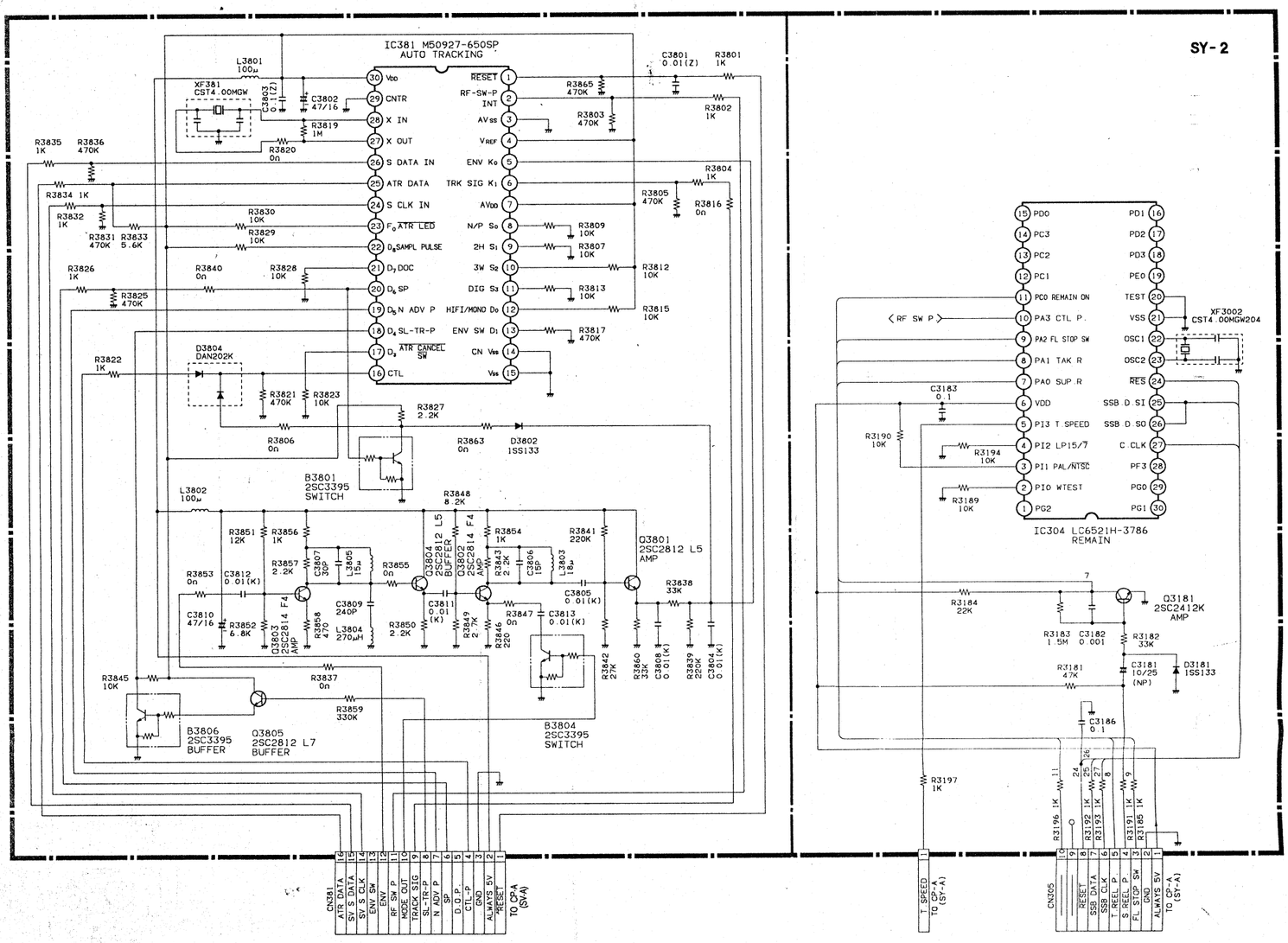

SY - A (CP - A) Ablaufsteuerung
SYSTEM CONTROL

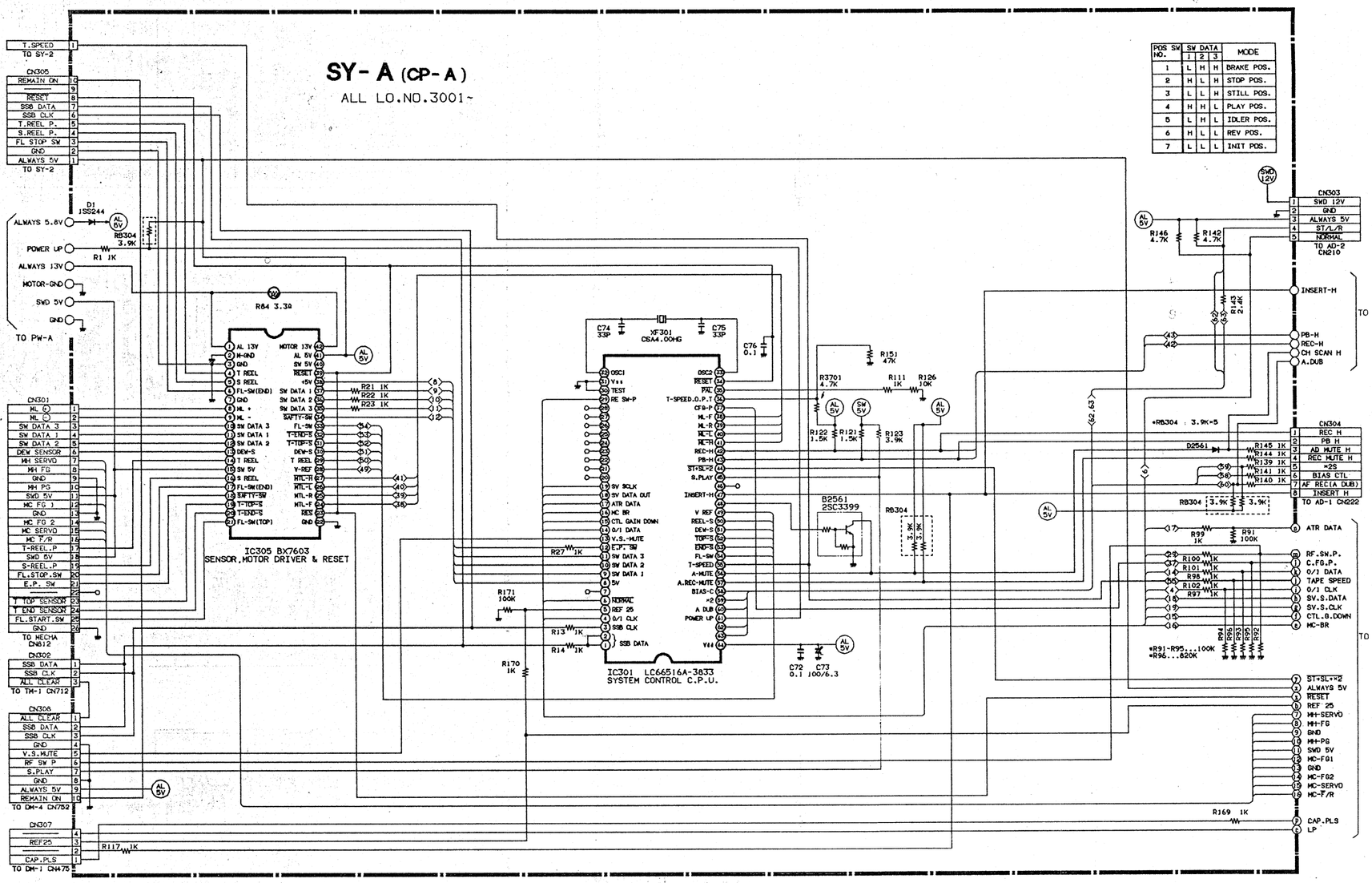

SY-2 AUTO TRACKING & TAPE REMAIN

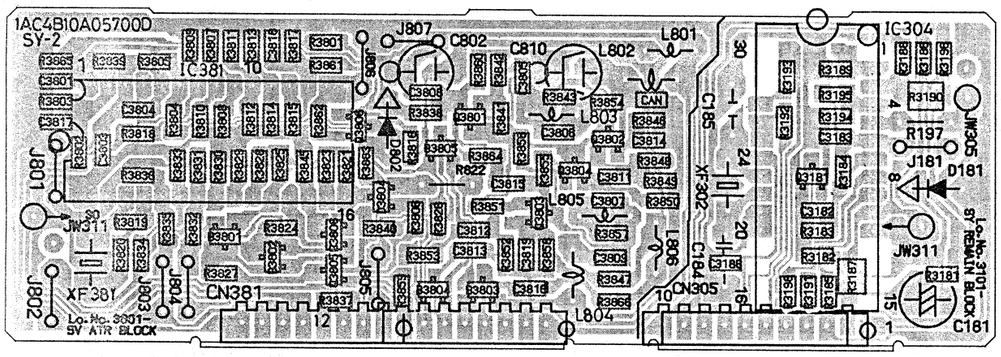

IC305 HIC

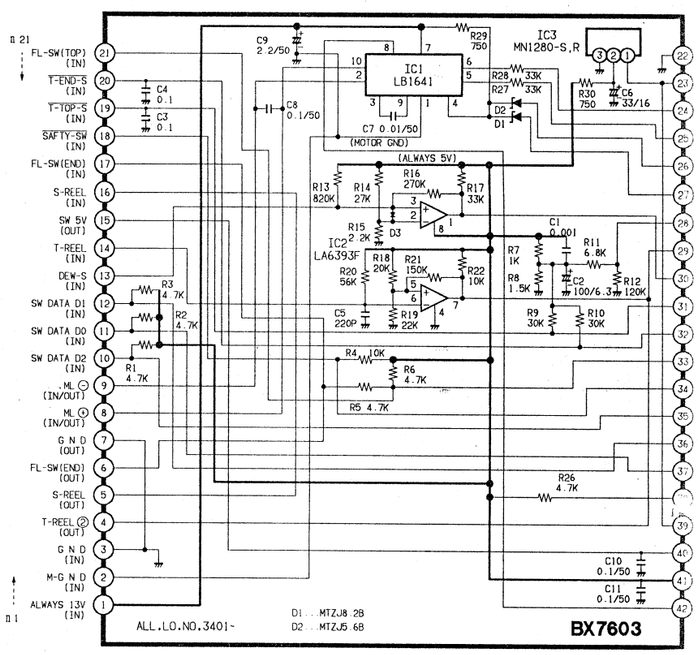

SV - A (CP - A) Servo

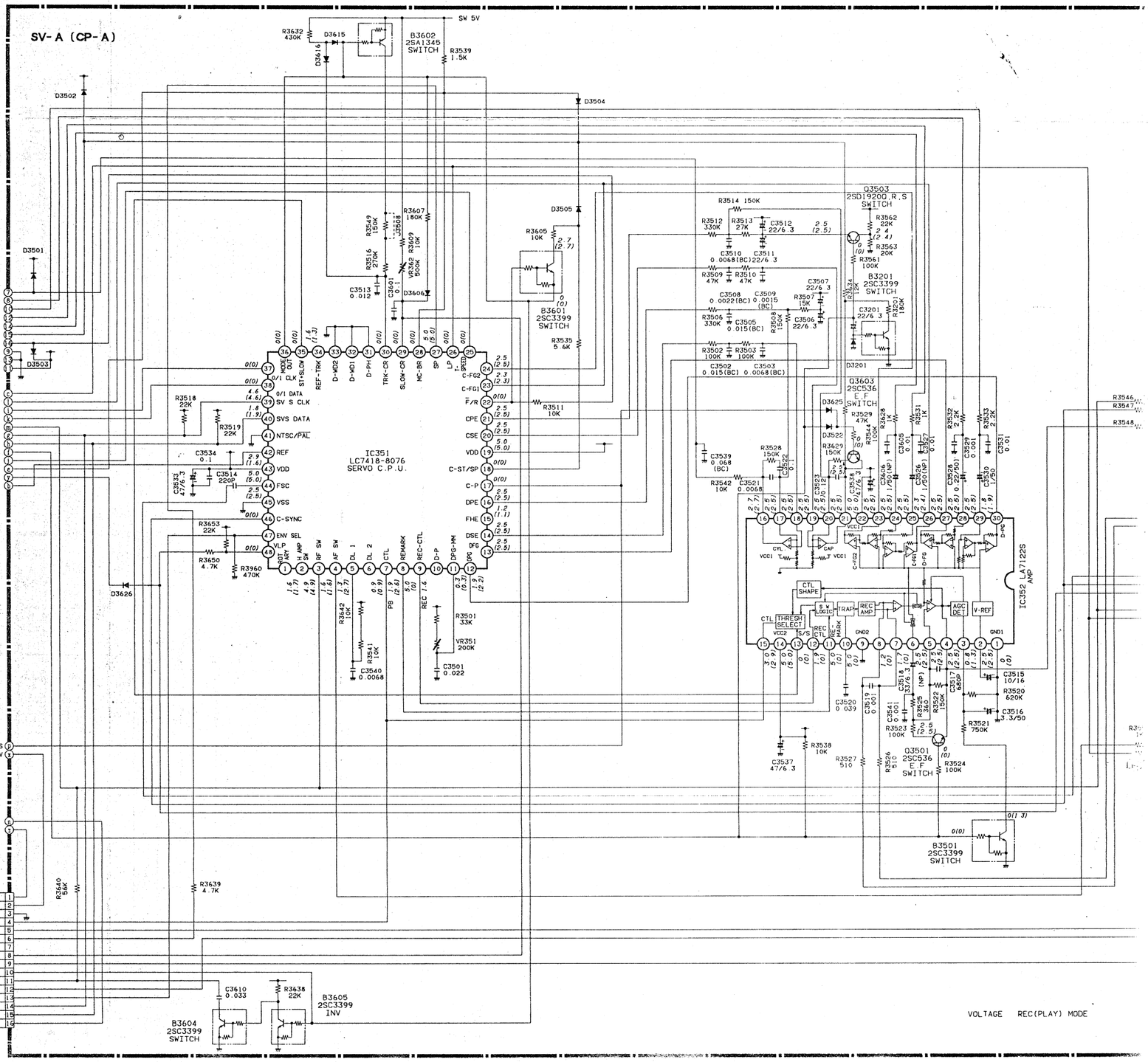

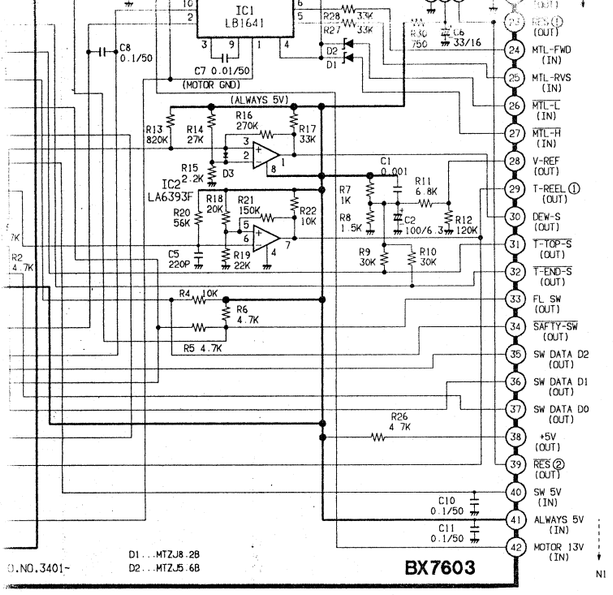

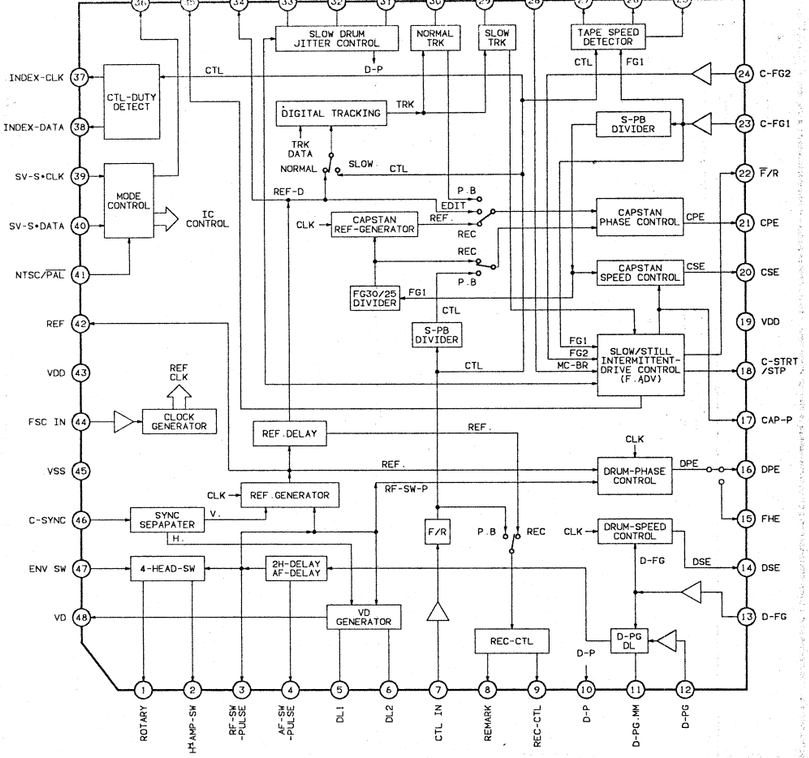

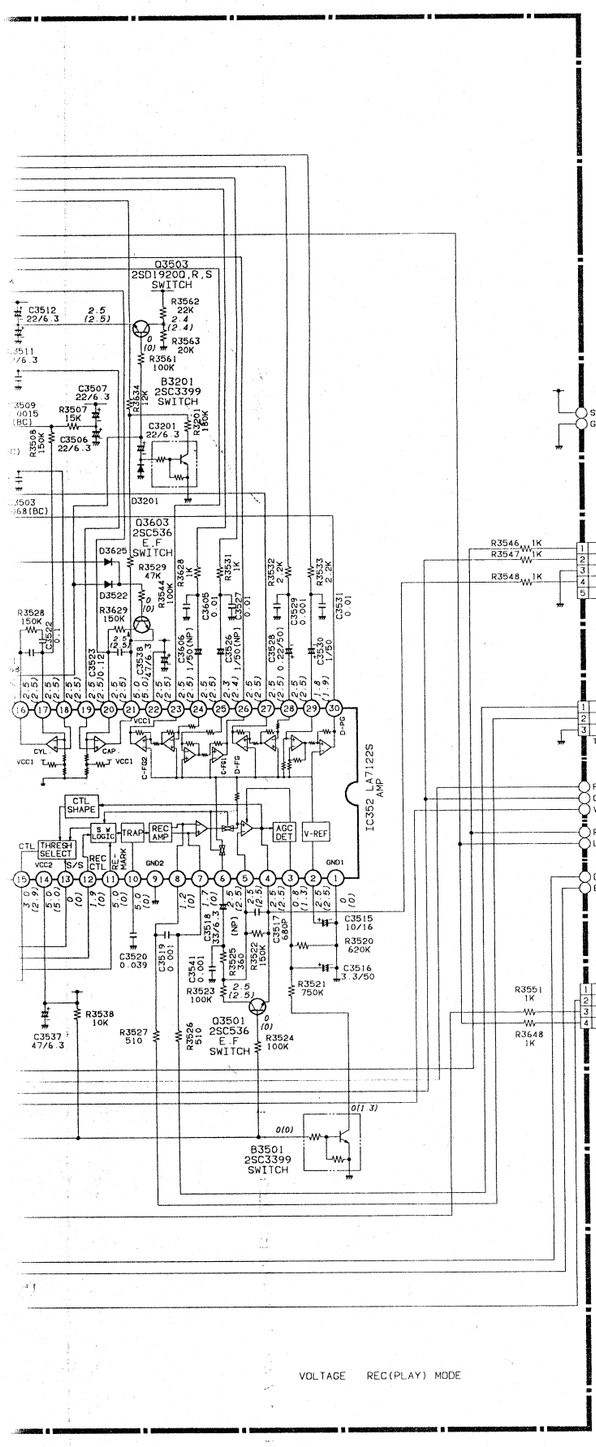

SERVO

IC351 (LC7418)

		⑳	5V, 17.053KHz	⑮	REC: 3.8V, 24msec, 16msec; P.B.: 3.9V, 24msec, 16msec
③	4.8V, 20msec, 20msec	㉓	4V, 0.66msec		
④ ㊷	5V, 20msec, 20msec	㉚	3msec, 3V, 40msec	㉕	20mV p-p, 0.66msec
⑤	0.4msec, 3V, 20msec	㊲	17μsec, 5V, 40msec	㉖	4V, 0.66msec
⑦	REC: 3.8V, 24msec, 16msec	㊹	1Vp-p, 4.43MHz	㉗	4V, 1.33msec = 750Hz
	P.B.: 3.9V, 24msec, 16msec	㊻	T = 20msec	㉘	10mV p-p, 1.33msec
⑨	5V, 24msec, 16msec			㉙	150mV p-p, 40msec

IC352 (LA7122)

⑪	2.1msec, 3V, 20msec	③	P.B.: 40mV, 40msec
⑫	3.9V, 40msec	④	P.B.: 1.2Vp-p
⑬	4V, 1.33msec = 750Hz	⑦ ⑧	REC: 3.2V, 24msec, 16msec
⑭ ⑯ ㉑	5V, 8.593KHz	⑫	5V, 24msec, 16msec

20	21	22	23	24	25	26	27	28	29	30	31

AD-1 AUDIO

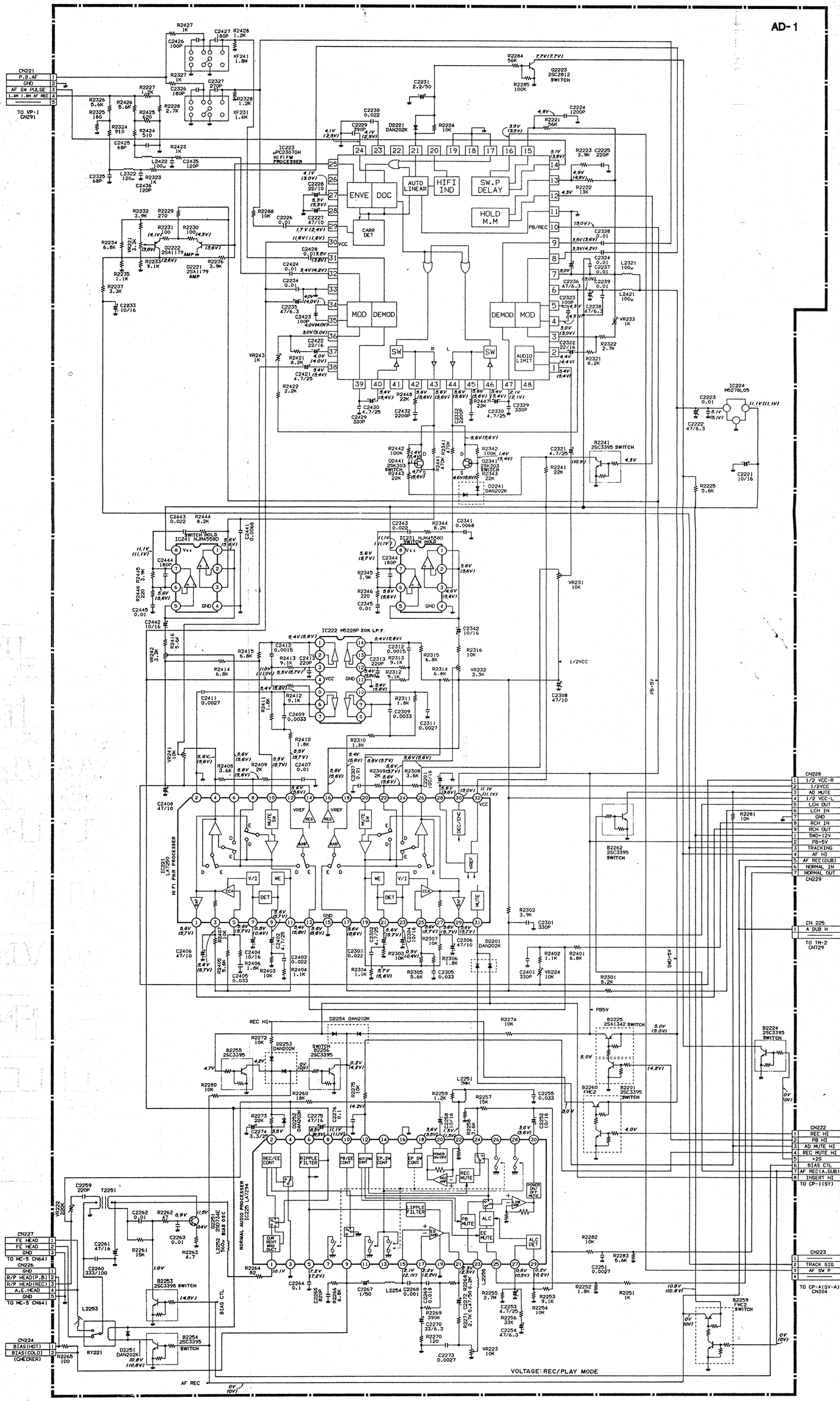
AD-1
IC223 μPC2307GH HIFI FM PROCESSER
ENVE DOC
AUTO LINEAR
HIFI IND
SW.P DELAY
HOLD M.M
CARR DET
MOD DEMOD
DEMOD MOD
SW
AUDIO LIMIT
IC224 M5278L05
IC221 LA1250 HI FI PNR PROCESSER
IC222 M5228P 20K LP.F.
IC231 NJM4558D SWITCH HOLD
IC241 NJM4558D SWITCH HOLD
NORMAL AUDIO PROCESSER IC225 LA1294
B2241 2SC3395 SWITCH
B2223 2SA1342 SWITCH
B2224 2SC3395 SWITCH
B2225 2SA1342 SWITCH
B2226 2SC3395 SWITCH
B2253 2SC3396 SWITCH
B2254 2SC3395 SWITCH
B2255 2SC3395
B2259 FMC2 SWITCH
B2260 FMC2
B2262 2SC3395 SWITCH
Q2221 2SA1179 AMP
Q2222 2SA1179 AMP
Q2223 2SC2812 SWITCH
D2221 DAN202K
D2241 DAN202K
D2251 DAN202K
D2253 DAN202K
D2254 DAN202K
CN221 P.B.AF GND AF SW PULSE 1.4H 1.8H AF REC
TO VP-1 CN291
CN222 REC HI PB HI AD MUTE HI REC MUTE HI +25 BIAS CTL AF REC(A.DUB) INSERT HI
TO CP-1(SY)
CN223 TRACK SIG AF SW P
TO CP-A(SV-A) CN304
CN224 BIAS(HOT) BIAS(COLD) (CHECKER)
CN225 A DUB H
TO TM-2 CN729
CN226 GND R/P HEAD(P,B) R/P HEAD(REC) A.E.HEAD GND
TO HC-5 CN641
CN227 FE HEAD FE HEAD GND
TO HC-5 CN641
CN228 1/2 VCC-R 1/2VCC AD MUTE 1/2 VCC-L LCH OUT LCH IN GND RCH IN RCH OUT SWD+12V PB+5V TRACKING AF HI AF REC(DUB) NORMAL IN NORMAL OUT
TO AD-2 CN204
TO AD-2 CN205
CN229
REC/EE CONT
RIPPLE FILTER
PB/EE CONT
MUTING CONT
EP SW CONT
POWER SW
REC MUTE
PB MUTE
EE MUTE
ALC
ALC DET
DUB PB/REC OUT
SW(+9V) SW MUTE
BIAS CTL
AF REC
VOLTAGE: REC/PLAY MODE

AD-2

PINP OUTPUT SELECTOR SW

SIGNAL SELECTOR(SUB) (PINP II)

IC 1 & IC 2 SWITCH LOGIC

INH Pin6	A Pin10	B Pin 9	ON SWITCH X	ON SWITCH Y
L	L	L	0X	0Y
L	H	L	1X	1Y
L	L	H	2X	2Y
L	H	H	3X	3Y
H	※	※	OPEN	

※ Don't Care

VOLTAGE: REC(PLAY) MODE

VP-1 (AP-A) Audio Vorverstärker
AUDIO PRE - AMP

VP-1(AP-A)

IC291 UPC2304

VOLTAGE : REC(PLAY) MODE

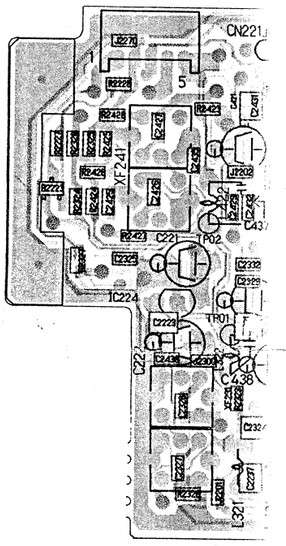

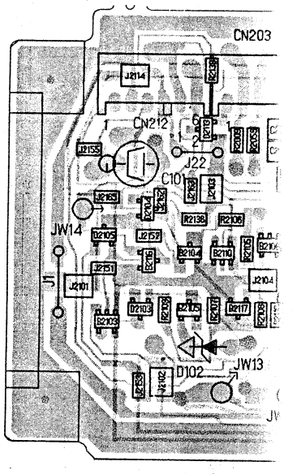

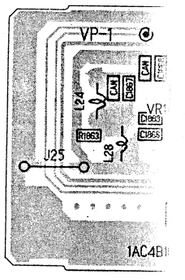

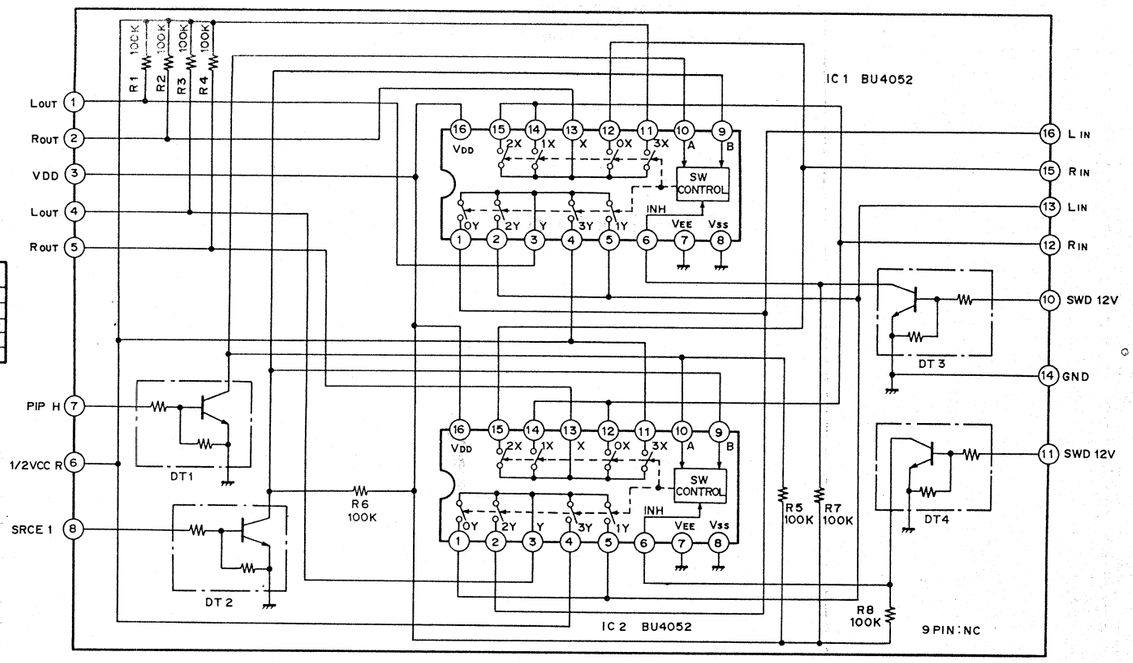

C 1 & IC 2 SWITCH LOGIC

INH Pin 6	A Pin 10	B Pin 9	ON SWITCH X	Y
L	L	L	0X	0Y
L	H	L	1X	1Y
L	L	H	2X	2Y
L	H	H	3X	3Y
H	※	※	OPEN	

※ Don't Care

AD-1 AUDIO Hi-Fi DE-MODULATOR & NORMAL AUDIO

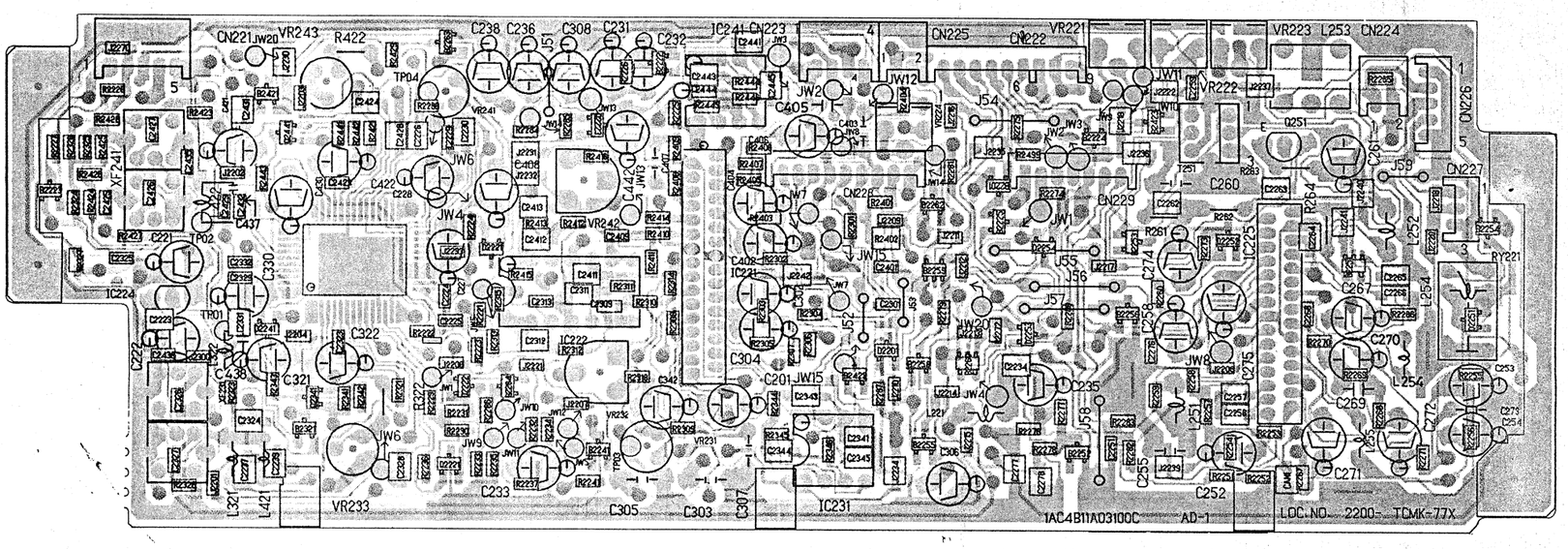

AD-2 AUDIO INPUT/OUTPUT SIGNAL SELECT

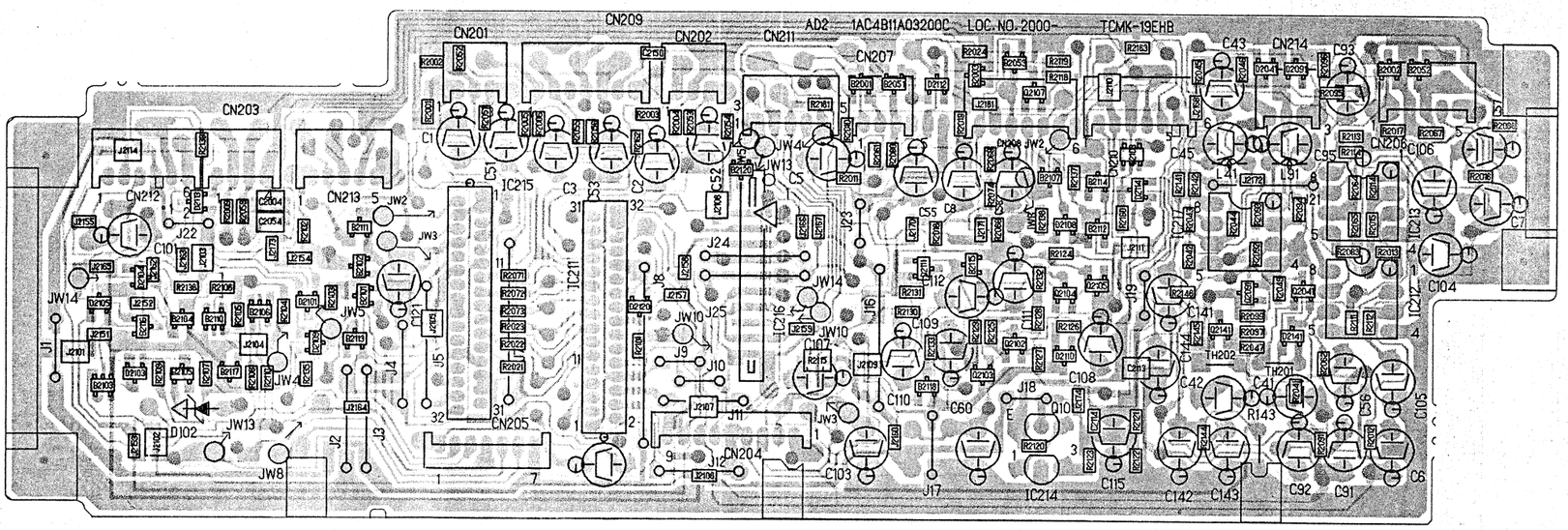

VP-1 VIDEO AUDIO PRE-AMP

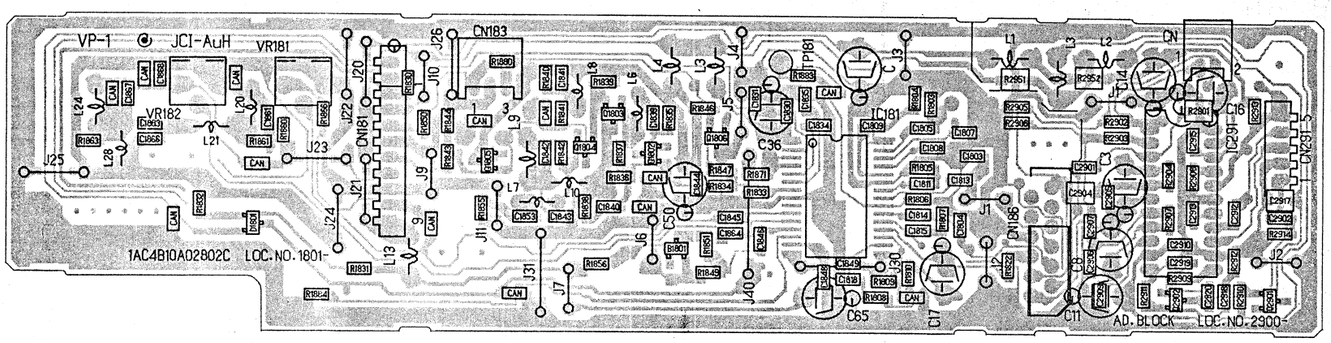

TN - A (CP - A) Adapterteil
TUNER CONNECTION

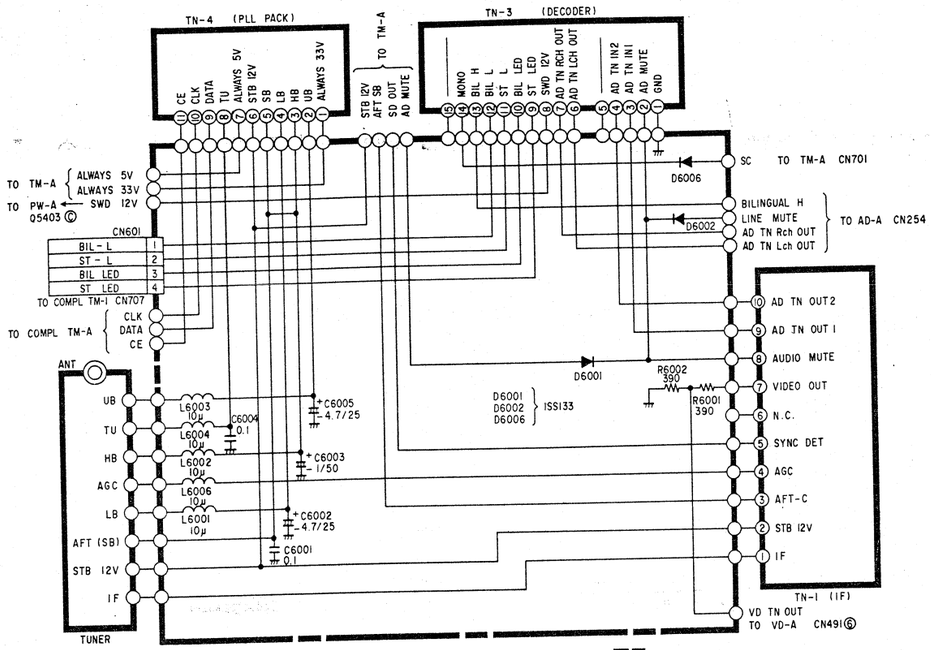

TN - 1 ZF IF

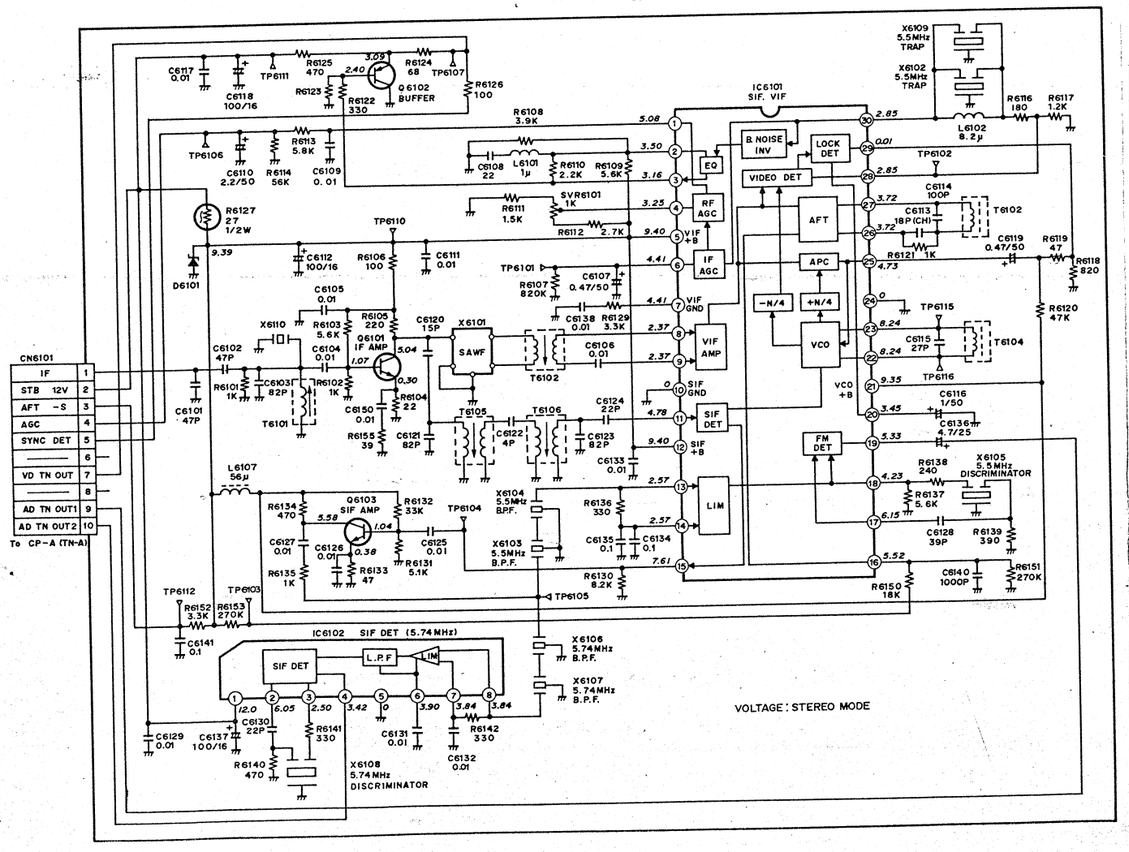

TN-4 PLL

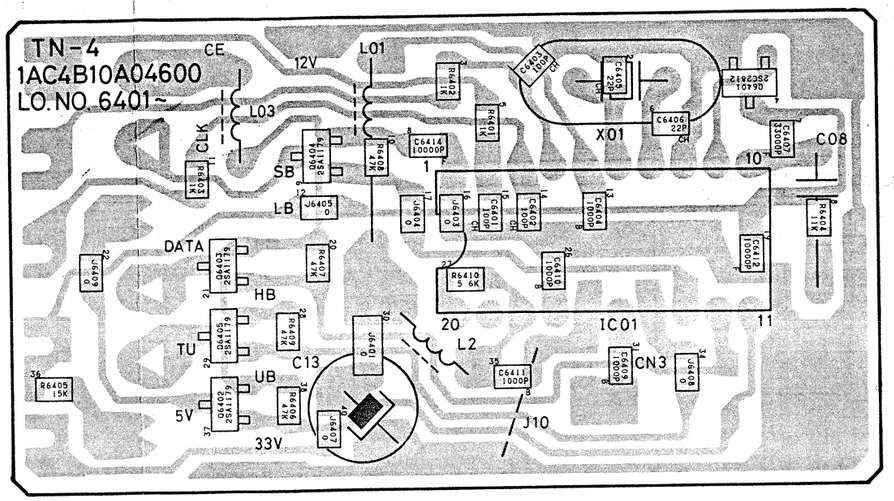

TN - 1 IF

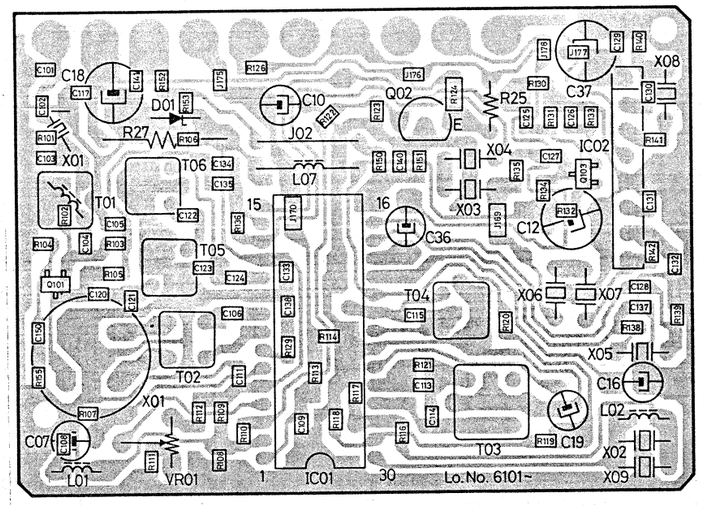

TN - 3 STEREO DECODER

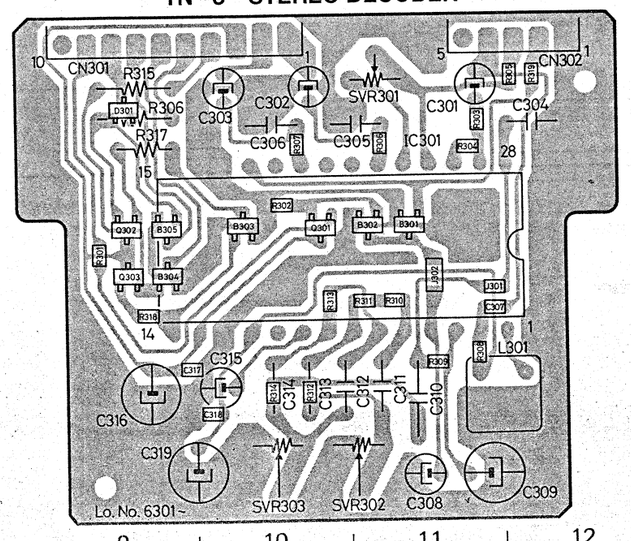

TN-4 PLL

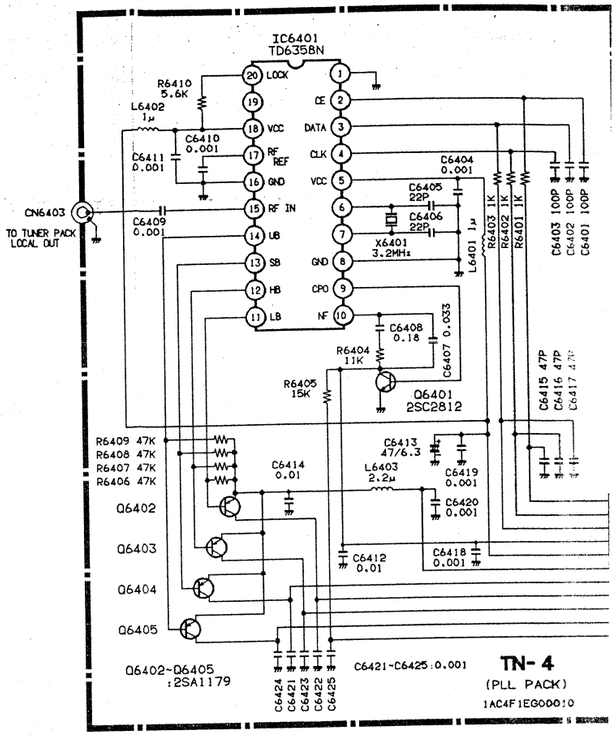

TN - 3 STEREO DE

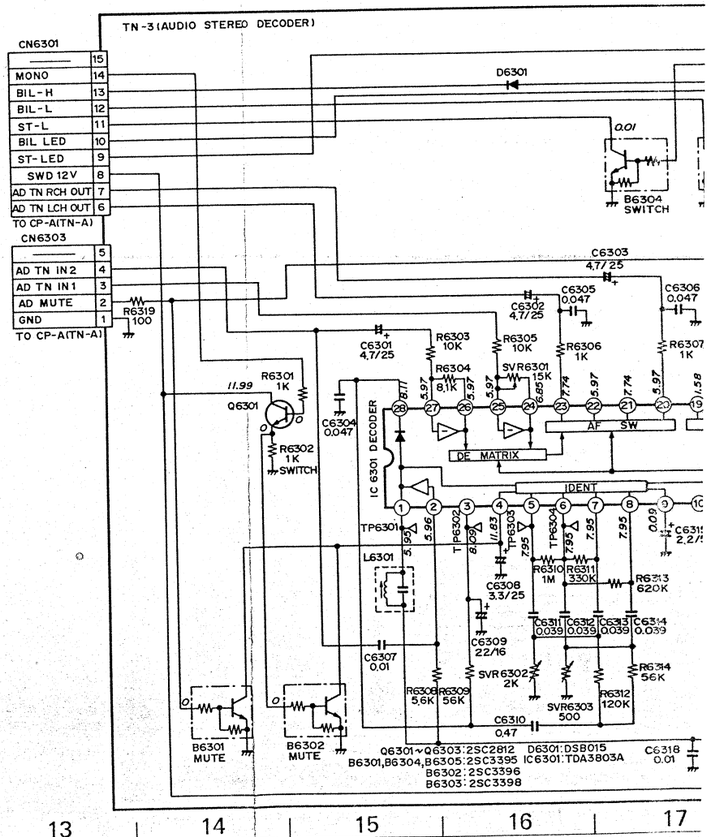

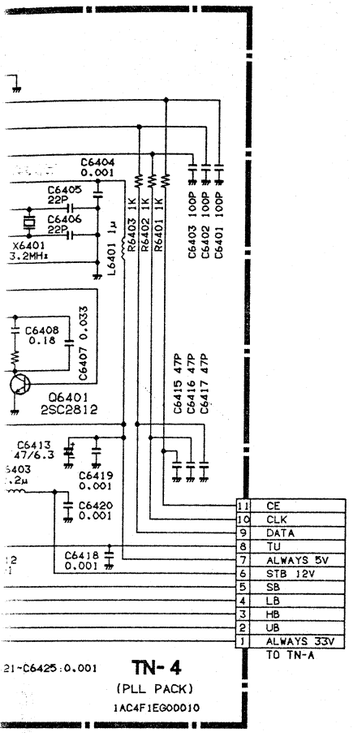

TN- 4
(PLL PACK)
1AC4F1EG00010

TN - 3 STEREO DECODER

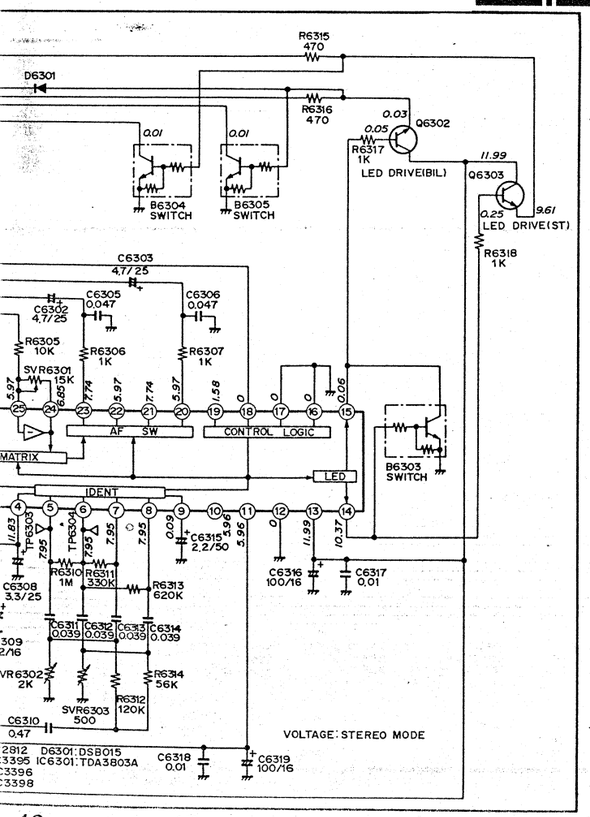

Modulator
RF CONVERTER

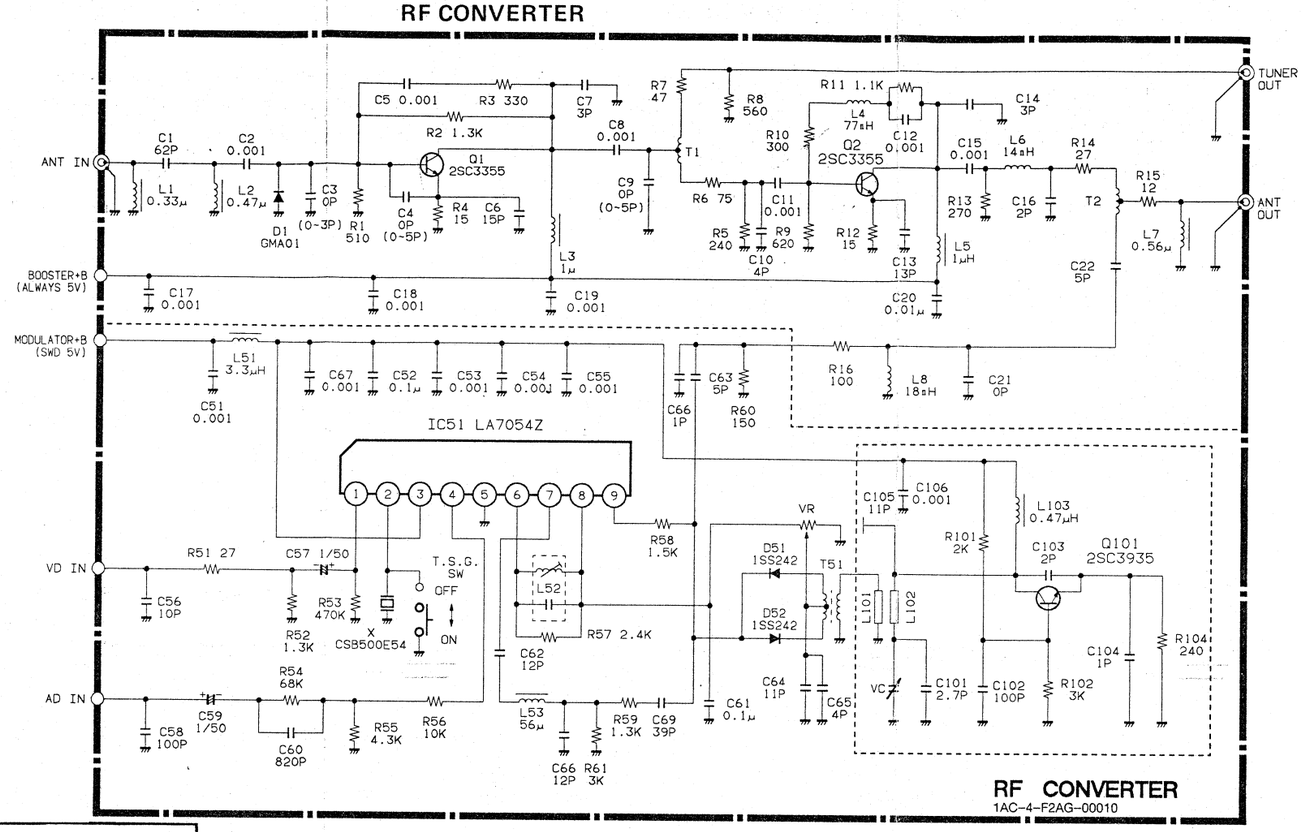

RF CONVERTER
1AC-4-F2AG-00010

TB-1 Buchsenplatte
TERMINAL

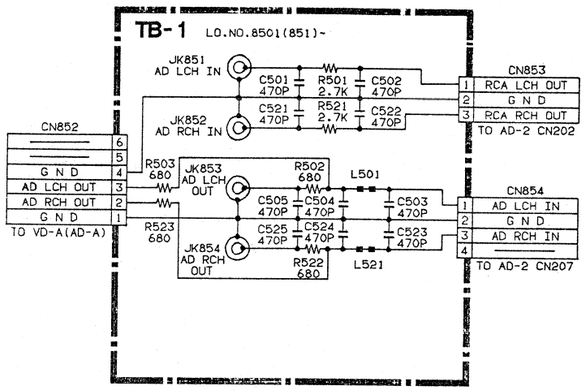

TB-1 TERMINAL

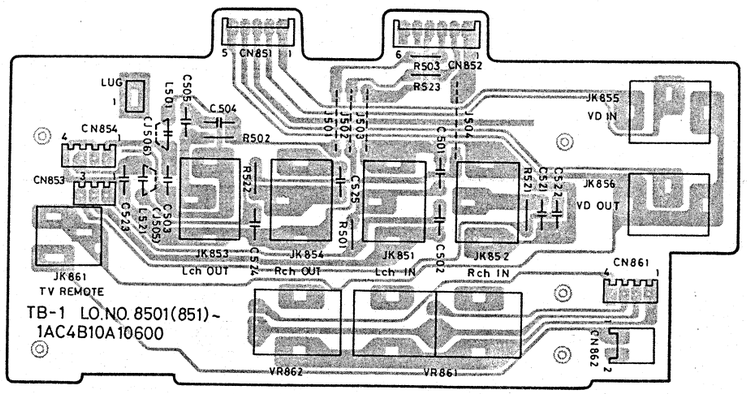

Modulator
RF CONVERTER

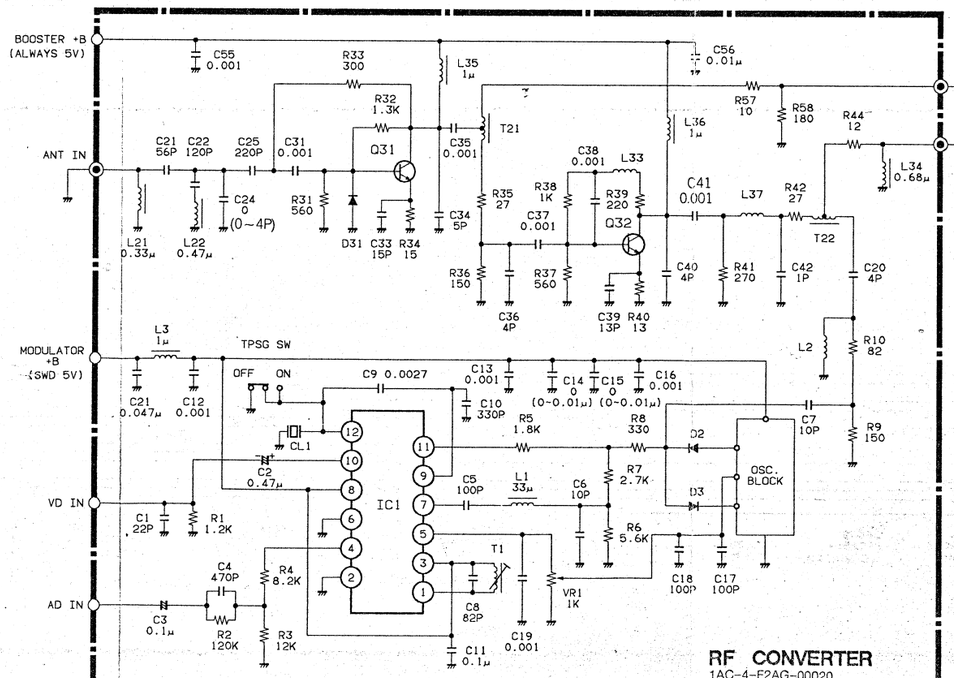

RF CONVERTER
1AC-4-F2AG-00020

NOTE

IC1 : AJ7080

Q61 : 2SC2480 OR EQUIVALENT
D2.D3 : HSM276 OR EQUIVALENT
D31 : 1SS133.1SS83 OR EQUIVALENT

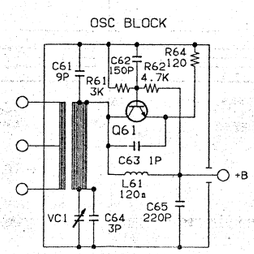

DM-1 Analog / Digital - Video

ANALOG PROCESS FOR DIGITAL MEMORY

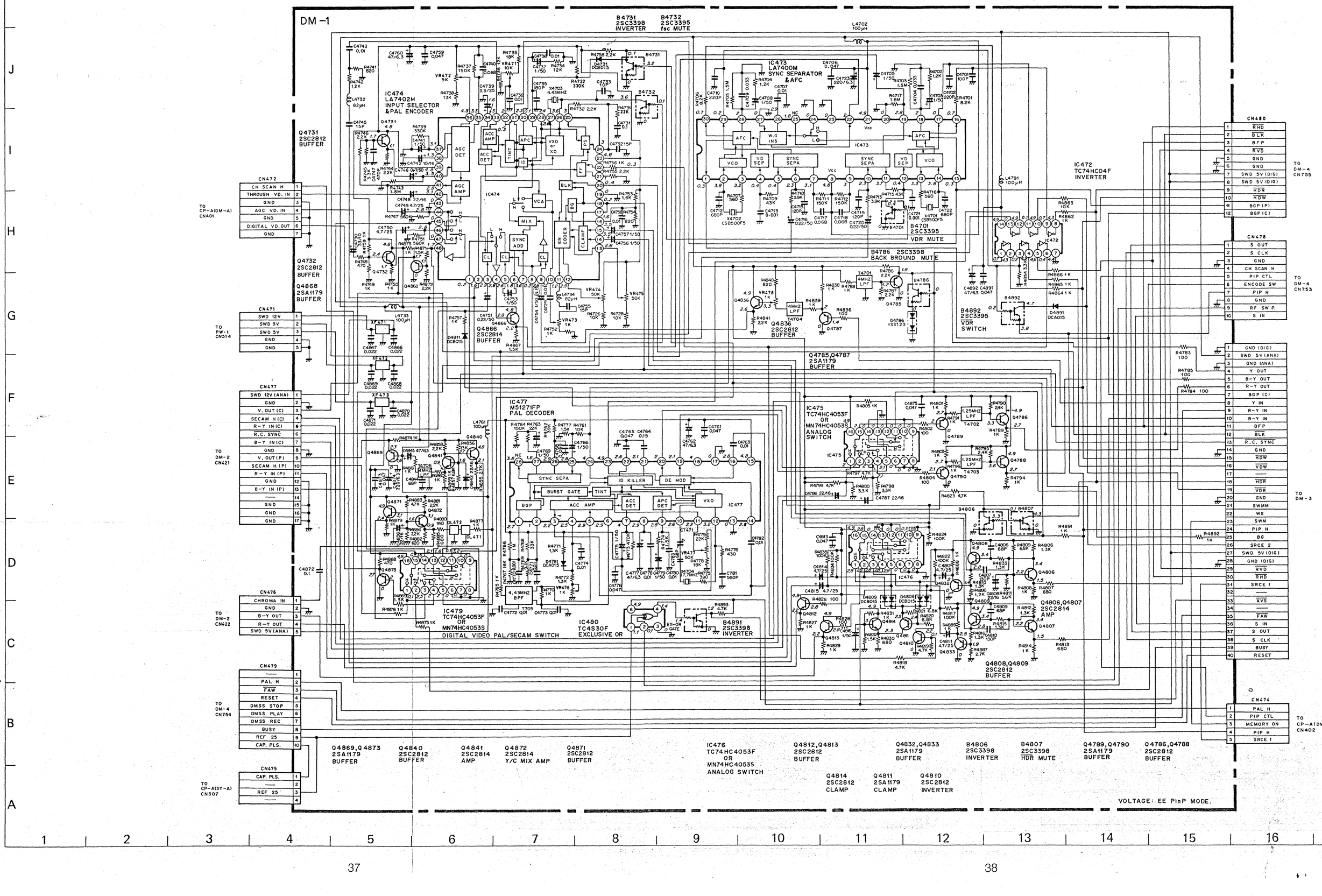

DM-2 SECAM CHROMA DECODER/ENCODER

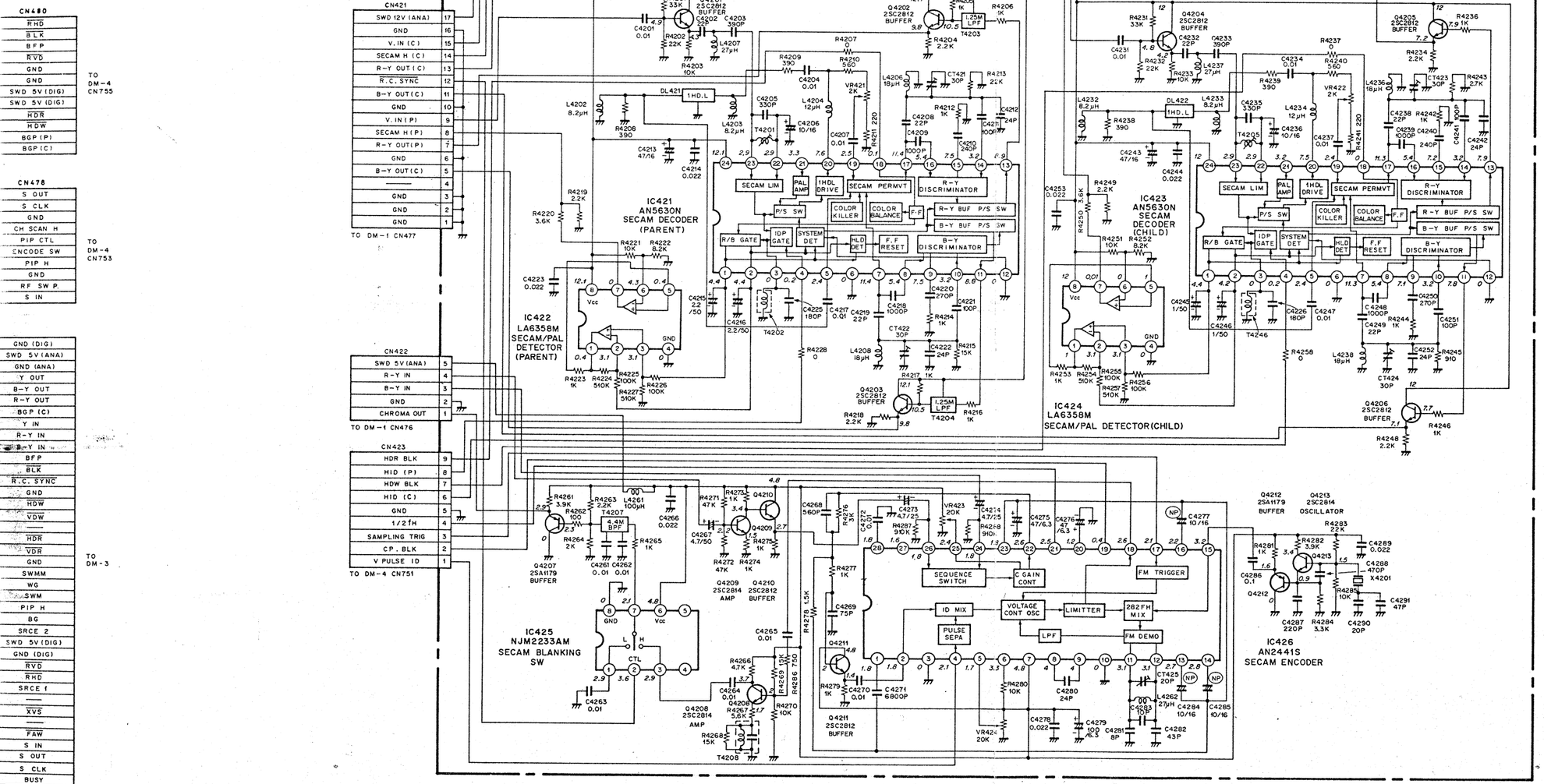

DM-1 ANALOG PROCESS F

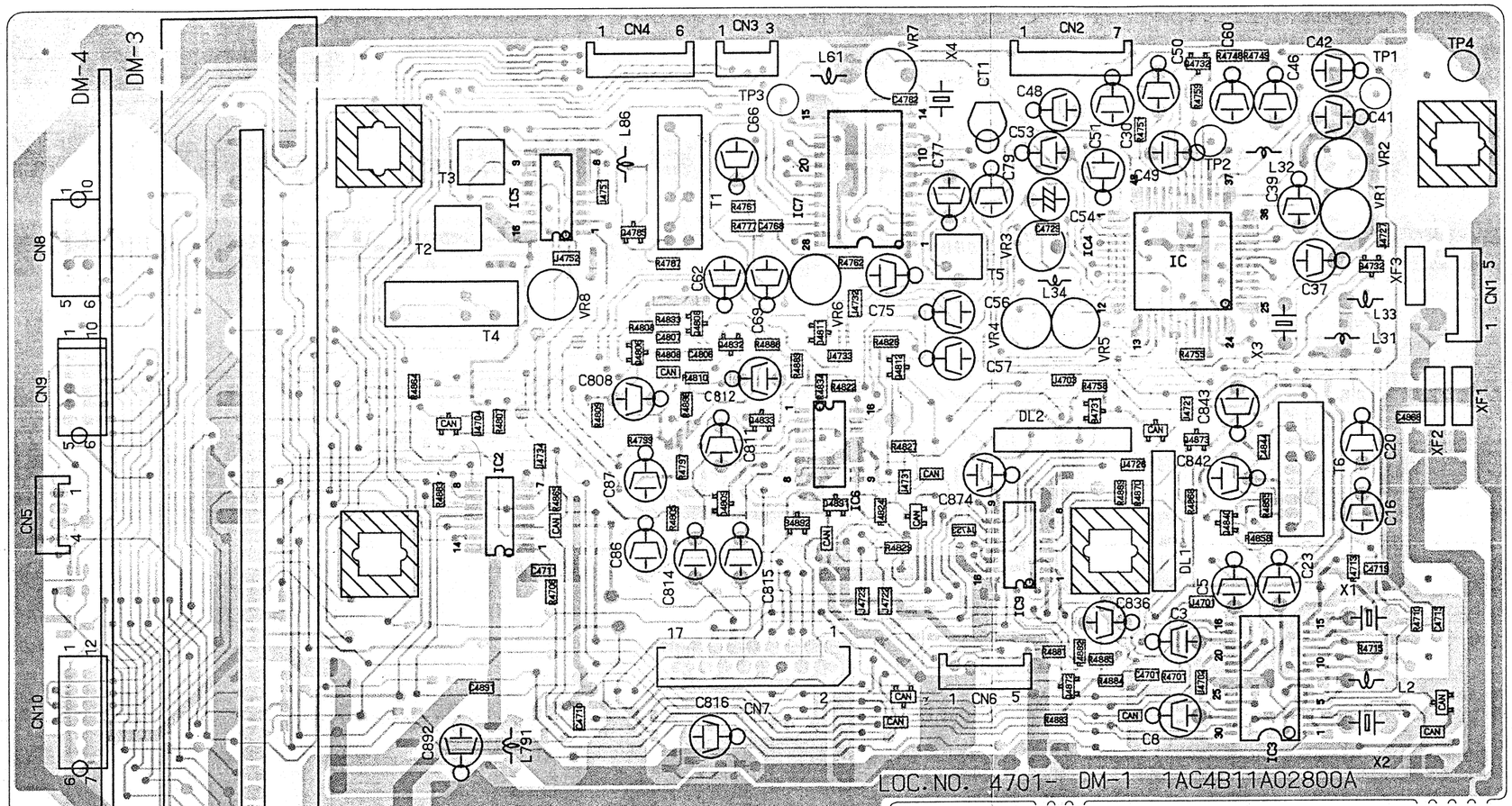

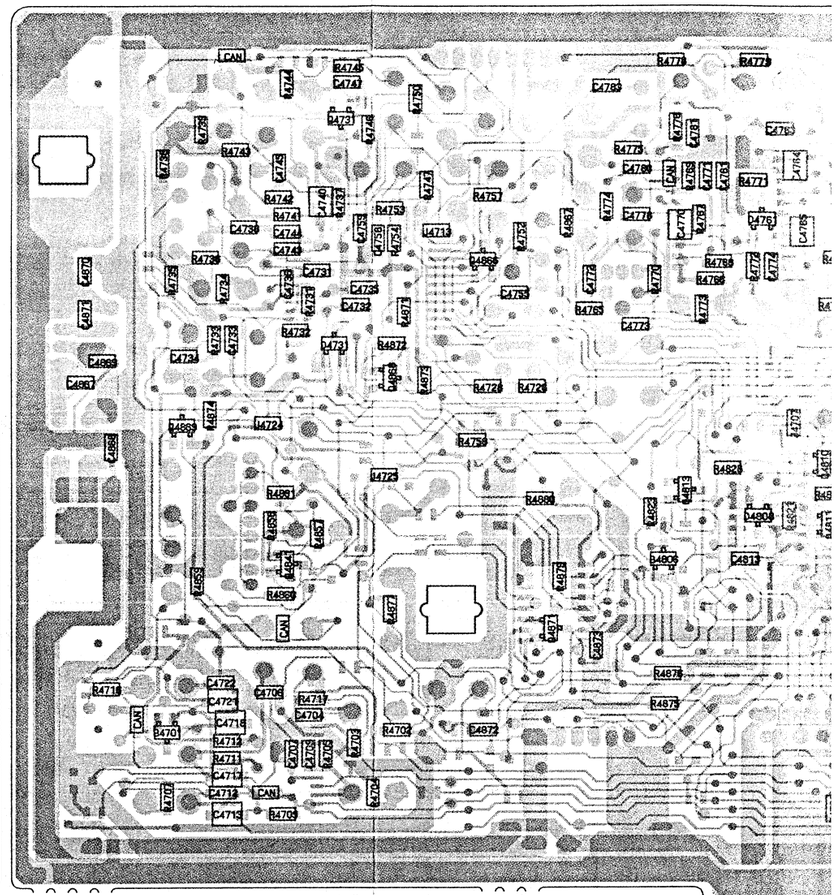

Hauptbestückungs- und Printseite

PARTS AND PRINTED SIDE

Löt- u

PRINTE

NALOG PROCESS FOR DIGITAL MEMORY

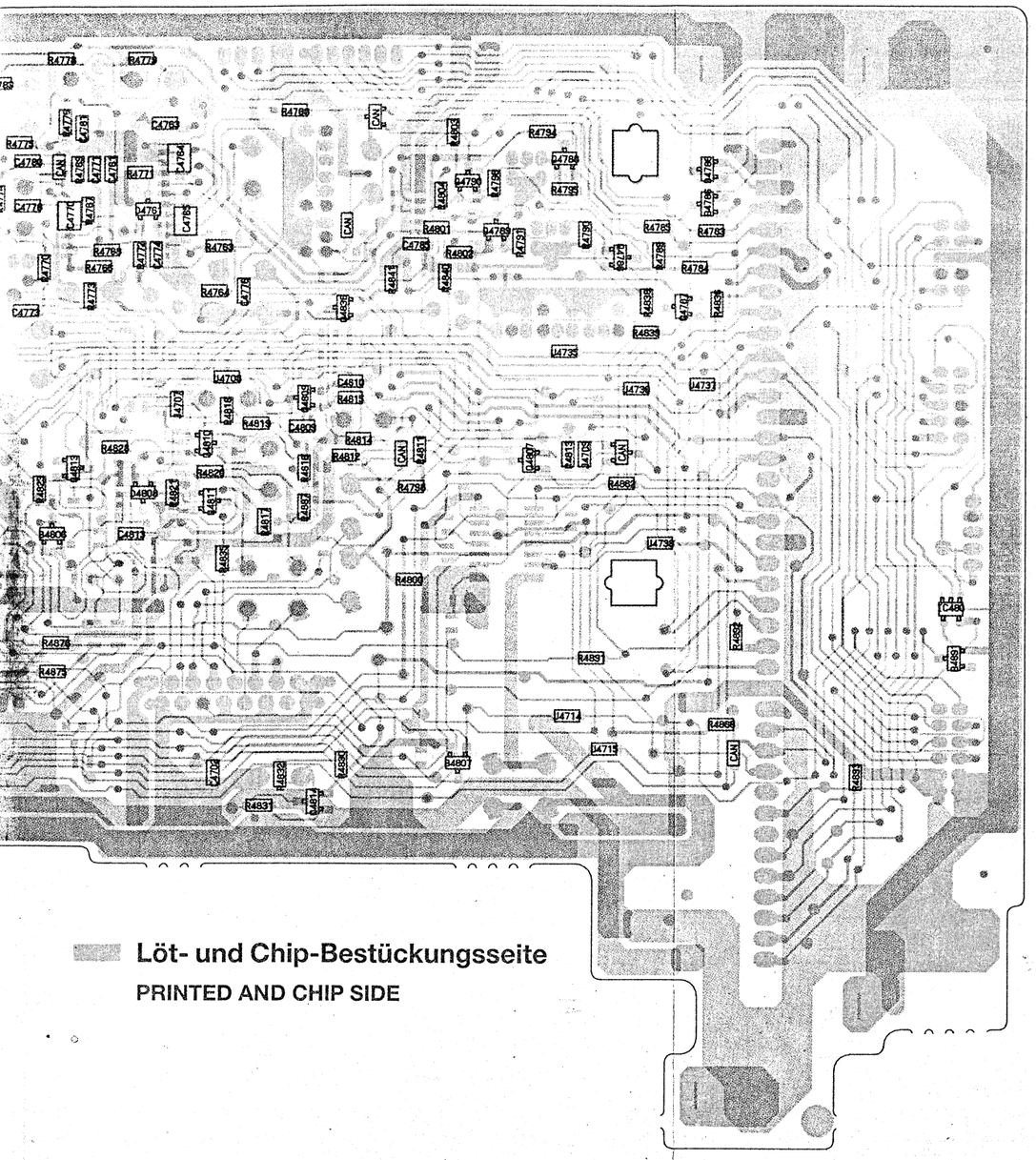

Löt- und Chip-Bestückungsseite
PRINTED AND CHIP SIDE

DM - 2 SECAM CHROMA DECODER / ENCODER

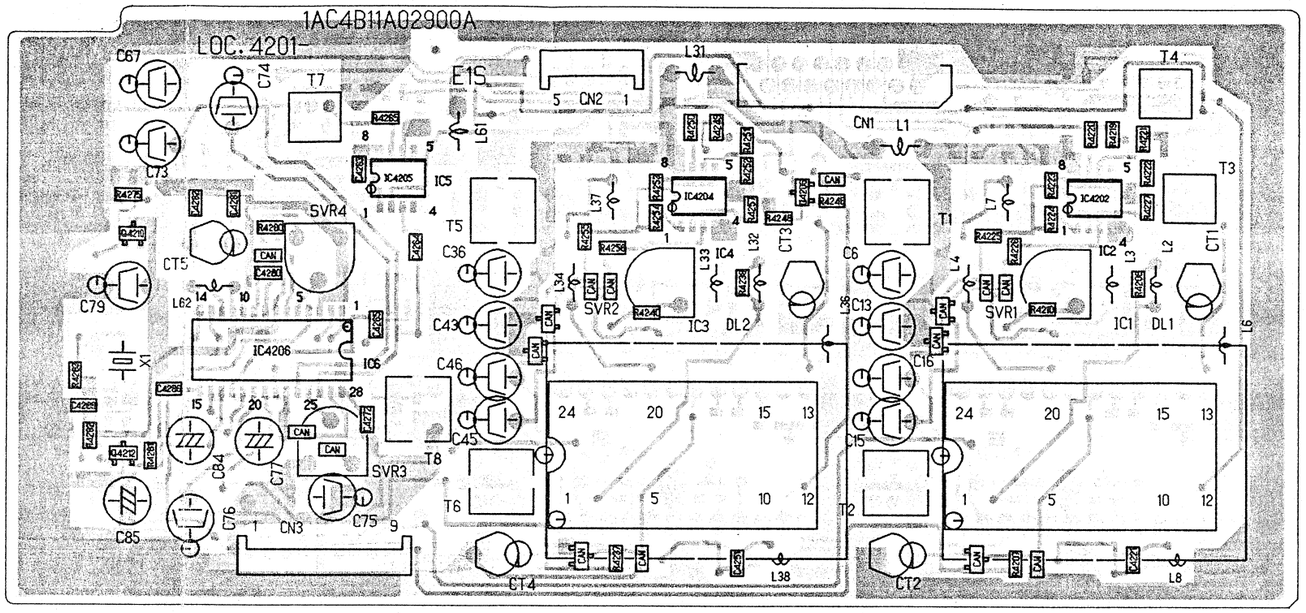

Hauptbestückungs- und Printseite
PARTS AND PRINTED SIDE

DM - 2 SECAM CHROMA DECODER / ENCODER

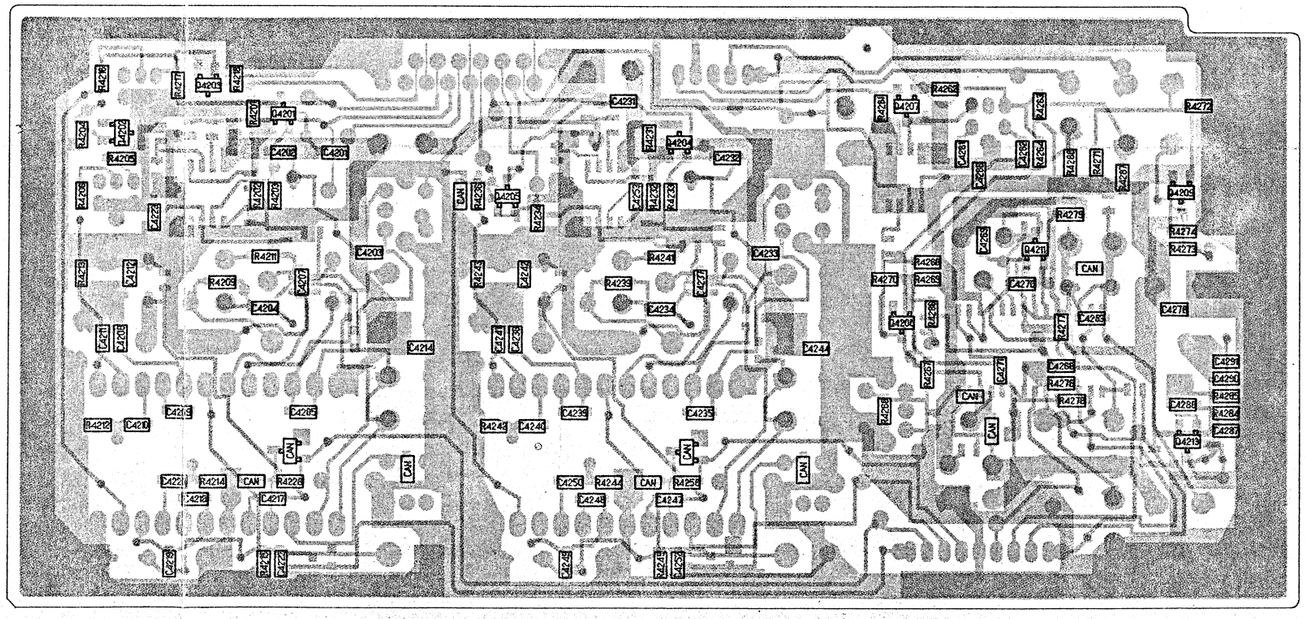

Löt- und Chip-Bestückungsseite
PRINTED AND CHIP SIDE

16 17 18 19 20 21 22 23 24 25 26 27 28 29 30 31

DM-3 Digital - Speicher
DIGITAL MEMORY

DM-3

GND (DIG) 1
SWD 5V (ANA) 2
GND (ANA) 3
Y IN 4
B-Y IN 5
R-Y IN 6
BGP (C) 7
Y OUT 8
R-Y OUT 9
B-Y OUT 10
BFP 11
BLK 12
R.C. SYNC 13
GND(ANA) 14
HDW 15
VDW 16
17
HDR 18
VDR 19
GND(ANA) 20
SWMM 21
WG 22
SWM 23
PIP H 24
BG 25
SRCE 2 26
SWD 5V (DIG) 27
GND (DIG) 28
RVD 29
RHD 30
SRCE 1 31
XVS 32
33
FAW 34
S IN 35
S OUT 36
S CLK 37
BUSY 38
RESET 39
40

TO DM-1

D4301 RLZ6.2V
L4301 BC1
C4301 100/6.3
L4302 BC1
XF431 XF432 XF433 XF434 XF435 XF436 XF437 XF438
R4311 1K
R4312 1K
R4313 1K
XF439 XF440 XF441 XF442
R4314 100
R4315 1K
XF443
R4316 100
R4317 1K
R4301 1K
R4302 1K
XF444 XF445
L4303 BC1
D4302 RLZ6.2V
C4302 100/6.3
L4304 BC1
R4318 1K
R4303 1K
XF446
R4320 1K
R4304 1K
XF447
R4305 1K
XF449 XF450 XF451 XF452 XF453 XF454
R4306 1K
R4307 1K
R4308 1K
R4309 1K
R4310 1K

IC431 μPD74HC00G VDR SELECT
C4432 0.047

IC432 M50747-276FP INTERFACE μ COM
I/O PORT
ROM 8K byte
CPU 8bit
RAM 256 byte
INPUT PORT
OUT PORT
C.G
XF457
C4401 0.022
C4402 47/6.3
C4403 0.022
C4404 0.022
R4401 47K
C4431 0.1/50
C4405 0.022
X4401 8MHZ
C4406 18P
C4407 18P
R4402 1M

IC438 M52678FP A-D CONVERTER
CLAMP
ANALOG TO DIGITAL
CLOCK
L4501 100μH
C4501 0.022
C4502 47/6.3
C4503 0.022
C4504 C4505 0.068
C4506 1/50
C4507 0.0047
R4501 5.1K
C4509 0.00047
C4510 0.068
C4511 0.022
C4513 0.022
XF458
C4512 0.022

IC440 TC7S04F OR TC7S00F INVERTER
L4503 100μH
C4513 0.047
C4515 0.047
C4516 0.047
C4514 47/6.3
C4517 47/6.3
C4520 1/50
C4519 1/50
C4532 0.047

IC439 M52681 A/D CONVERTER
C4518 0.01
C4521 0.01
C4522 1/16
C4523 0.068
C4524 0.068

IC441 M5M4C500L DUAL PORT RAM
IC442 M5M4C500L DUAL PORT RAM
IC443 M5M4C500L DUAL PORT RAM
DUAL PORT MEMORY
ADRESS DECODER
XF460
C4526 0.022
C4527 470/6.3
C4529 0.068
C4530 0.068
C4531 0.068

IC444 HC157 YMPX
IC445 HC157 YMPX
XF461
C4601 0.022
C4602 0.022
C4603 47/6.3
C4604 0.022
C4605 0.022
R4601 4.7K×6
R4602 4.7K×6
R4400 4.7K

IC433 M60019-0279FP GATE ARRAY (TIMING CONTROL)

IC434 SN74LS629N XO/VCO
IC435 TC5C81AP PHASE DETECT
P.D.
IC436 74HC00F VCO/XO SELECT
IC437 SN74S124N VCO
IC448 TC7S04F OR RC7S00F OR TC4S11F OR TC4S69F
IC449 TC7404F OR RC7400F OR TC4S11F OR TC4S69F
IC448
Q4401 2SA1179 BUFFER
Q4403 2SC2812 BUFFER
D4401 1SS187
X4402 10MHz
C4411 47/6.3
C4410 0.047
C4403 33P
C4430 39P
C4408 68P
C4409 10K
C4410 15K
C4415 0.047
C4415 1500P
C4433 0.068
R4419 3.9K
C4412 39P
R4406 2.2K
R4403 10K
R4404 10K
R4405 10K
C4416 0.047
C4417 0.022
XF455
C4418 47/6.3
C4419 0.022
XF456
R4411 9.1K
CT431 10P
C4423 33P
C4424 0.068
R4412 4.4K
C4420 0.022
C4421 47/6.3
C4422 0.022
R4413 2.2K
TH431 2.2K
R4414 2.7K
R4415 11K
C4425 33P
C4427 68P
C4426 0.022
R4416 5.6K
R4417 1K
C4428 0.022
C4429 0.022

IC446 M52683FP D/A CONVERTER
L4601 100μH
C4609 0.047
C4610 0.047
C4611 47/6.3
C4607 0.068
C4608 1/50
C4608 0.068
C4612 0.068
C4613 0.047
C4614 0.047
C4615 47/6.3
R4602 100
R4603 100
R4604 100

DM-4

IC753,IC754,IC755 : SECAM ENCODER/DECODER CONTROL SIGNAL GENERATION

CN751
V PULSE ID 1
CP BLK 2
SAMPLING TRIG 3
1/2 fH 4
GND 5
H.ID(C) 6
HDW BLK 7
H.ID(P) 8
HDR BLK 9
TO DM-2 CN423

R7504 1K
R7505 1K
R7506 1K
R7508 1K
R7507 1K

C7501 0.1

IC755 JUA550
20 19 18 17 16 15 14 13 12 11
FF MM MIX MIX MM MIX FF COUNT
1 2 3 4 5 6 7 8 9 10

CN755
RHD 1
BLK 2
BFP 3
RVD 4
GND 5
GND 6
SWD 5V (DIG) 7
SWD 5V (DIG) 8
HDR 9
HDW 10
BGP (P) 11
BGP (C) 12
TO DM-1 CN480

R7516 1K
R7514 1K
R7512 1K
R7510 1K

L7501 100μ

D7501
HID(CHILD) WIDTH
C7504 1000P (PP)
VR751 4.7K
R7517 3.9K
IC753 TC74HC123F
C7505 1000P (PP)
R7518 3.9K
VR752 4.7K
HID(PARENTS) WIDTH
D7502

D7503
HDW BLK WIDTH
R7519 7.5K
C7507 0.01 (PP)
VR753 4.7K
IC754 TC74HC123F
C7508 0.01 (PP)
R7520 7.5K
VR754 4.7K
HDR BLK WIDTH
D7504

C7523 100/6.3
C7522 0.1
RESET
IC752 MN1280R S
R7542 750
C7524 33/16
D7505

R7545 10K
R7544 10K
R7546 10K
X7501 4266V01100 OR 4266V02700
C7521 0.01
C7525 33P
C7526 33P

IC751 LC6521H-3870
DIGITAL MEMORY CONTROL SUB M.P.U.
30 S IN
29 S CLK
28 SSB CLK
27 SSB SO
26 SSB SI
25 RESET
24 OSC
23 OSC
22 VSS
21 TEST
20 FAN
19 RESET
18 DMSS STOP
17 DMSS PLAY
16 DMSS REC
1 S.OUT
2 CH-SCAN
3 PIP-CTL
4 MULT
5 ENCODE SW
6 VDD
7 WRITE
8 REF25
9 BUSY
10 OE
11 REMAIN
12 PAL H
13 LP
14 MULTI
15 DMSS REC

RB751 10K×5

R7521 1K
R7522 1K
R7523 1K
R7524 1K
CN752
1 ALL CLEAR
2 SSB DATA
3 SSB CLK
4 V.S MUTE
5 RF SW P.
6 S PLAY
7 GND
8 ALWAYS 5V
9 REMAIN ON
TO CP-A(SY-A) CN308

R7527 1K
R7528 1K
R7530 1K
R7532 1K
R7533 1K
R7531 1K
R7529 1K
R7526 1K
CN754
1 —
2 PAL H
3 FAN
4 RESET
5 DMSS STOP
6 DMSS PLAY
7 DMSS REC
8 BUSY
9 REF 25
10 CAP.PLS.
TO DM-1 CN479

R7534 1K
R7536 1K
R7538 1K
R7540 1K
R7541 1K
R7537 1K
R7535 1K
CN753
1 S IN
2 S CLK
3 GND
4 CH SCAN H
5 PIP CTL
6 ENCODE SW
7 PIP H
8 GND
9 RF SW P.
10 S OUT
TO DM-1 CN478

DIODE : 1SS133

16 17 18 19 20 21 22 23 24 25 26 27 28 29 30 31

DM-3 DIGITAL MEMORY S.A

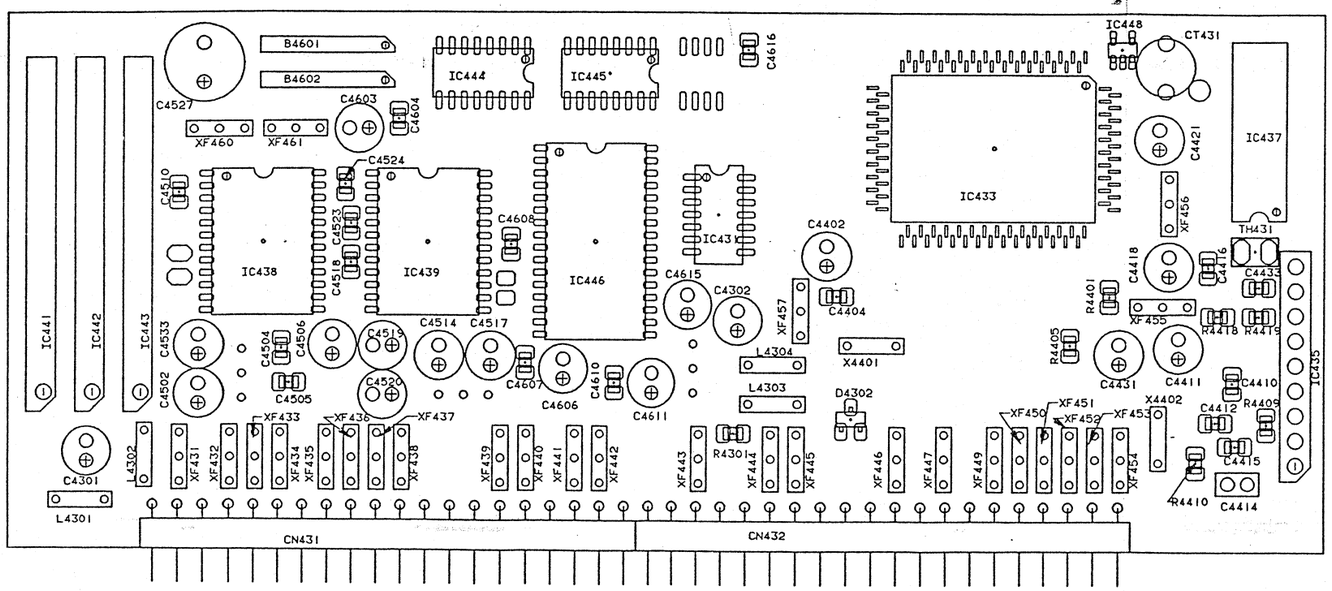

DM-3 DIGITAL MEMORY S.B

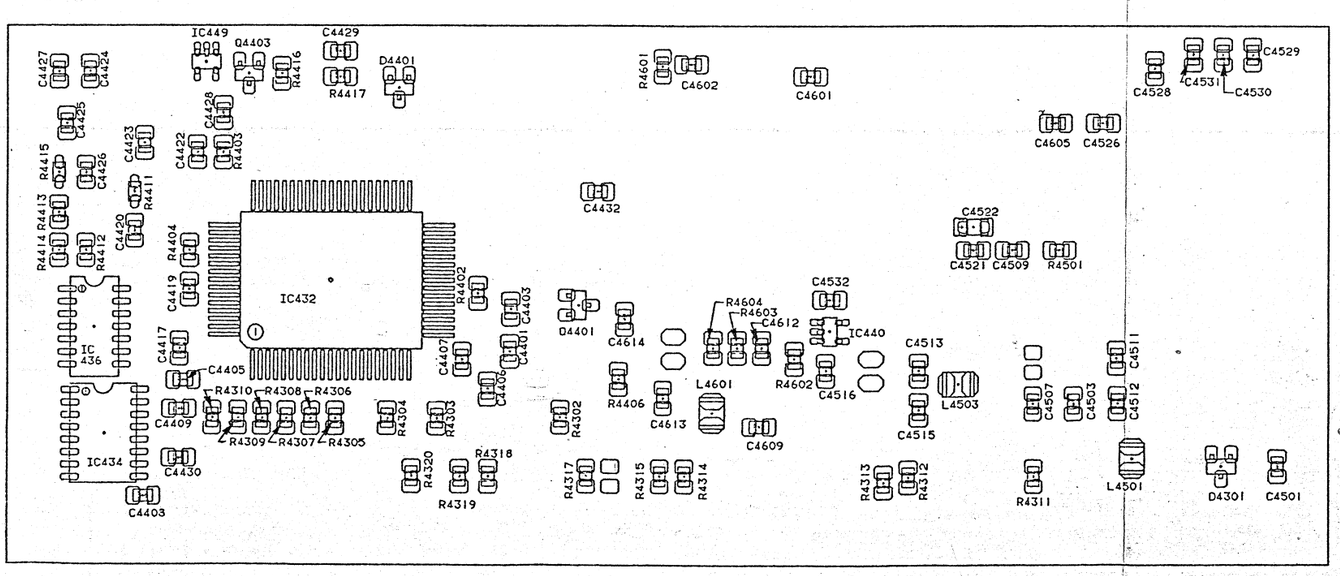

DM-4 DIGITAL MEMORY CONTROL

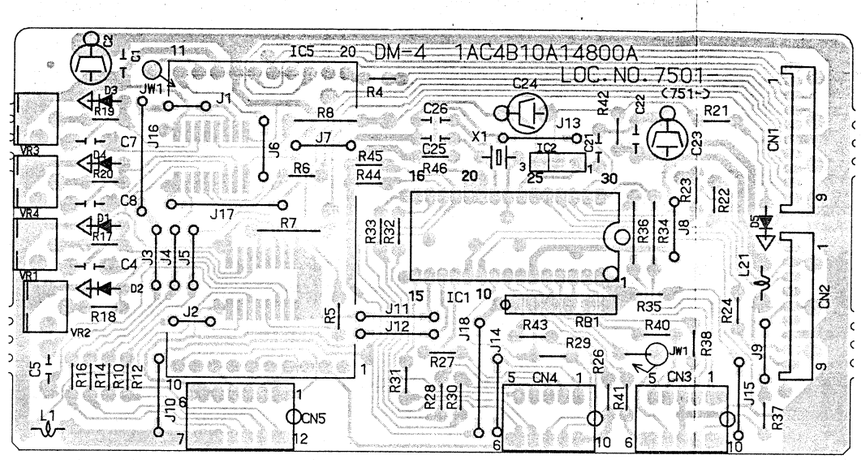

IR - Geber

IR REMOTE CONTROL

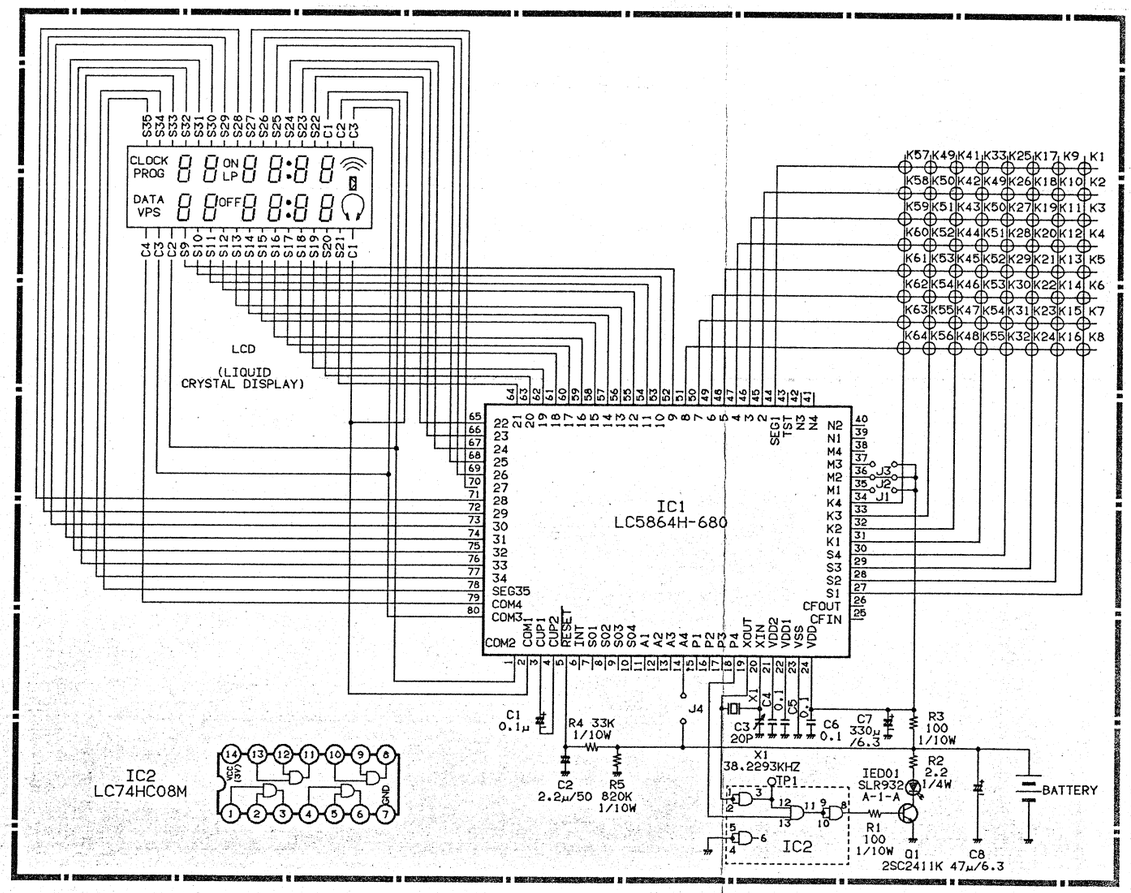

PW - A (CP - A) Spannungsversorgung
POWER SUPPLY

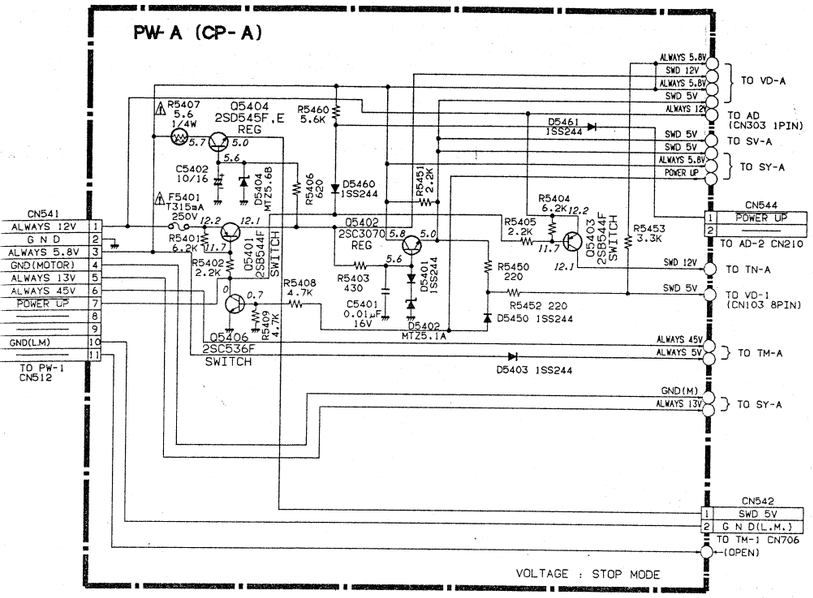

PW-1 POWER SUPPLY

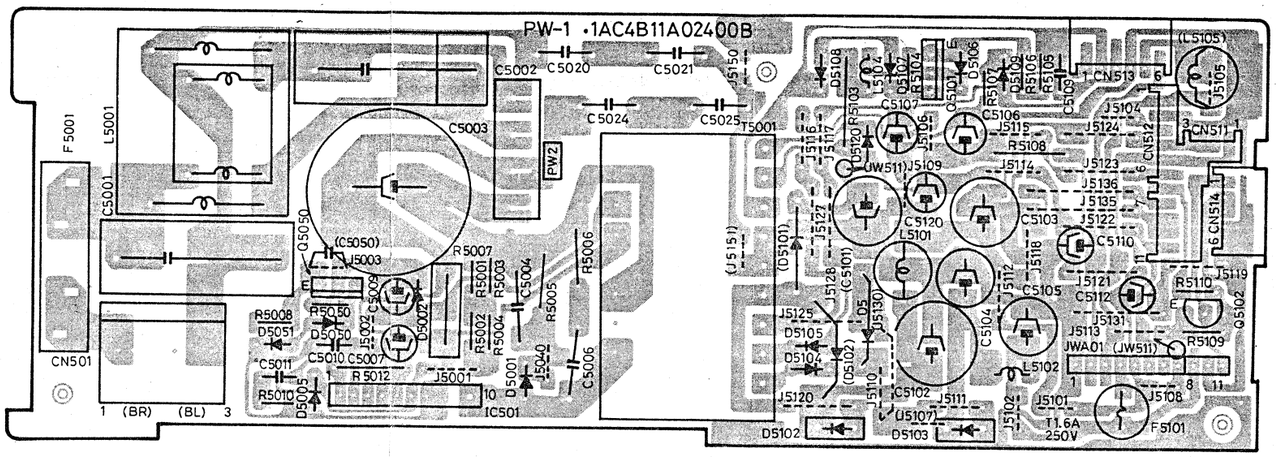

PW - 1,2,3 Netzteil
POWER SUPPLY

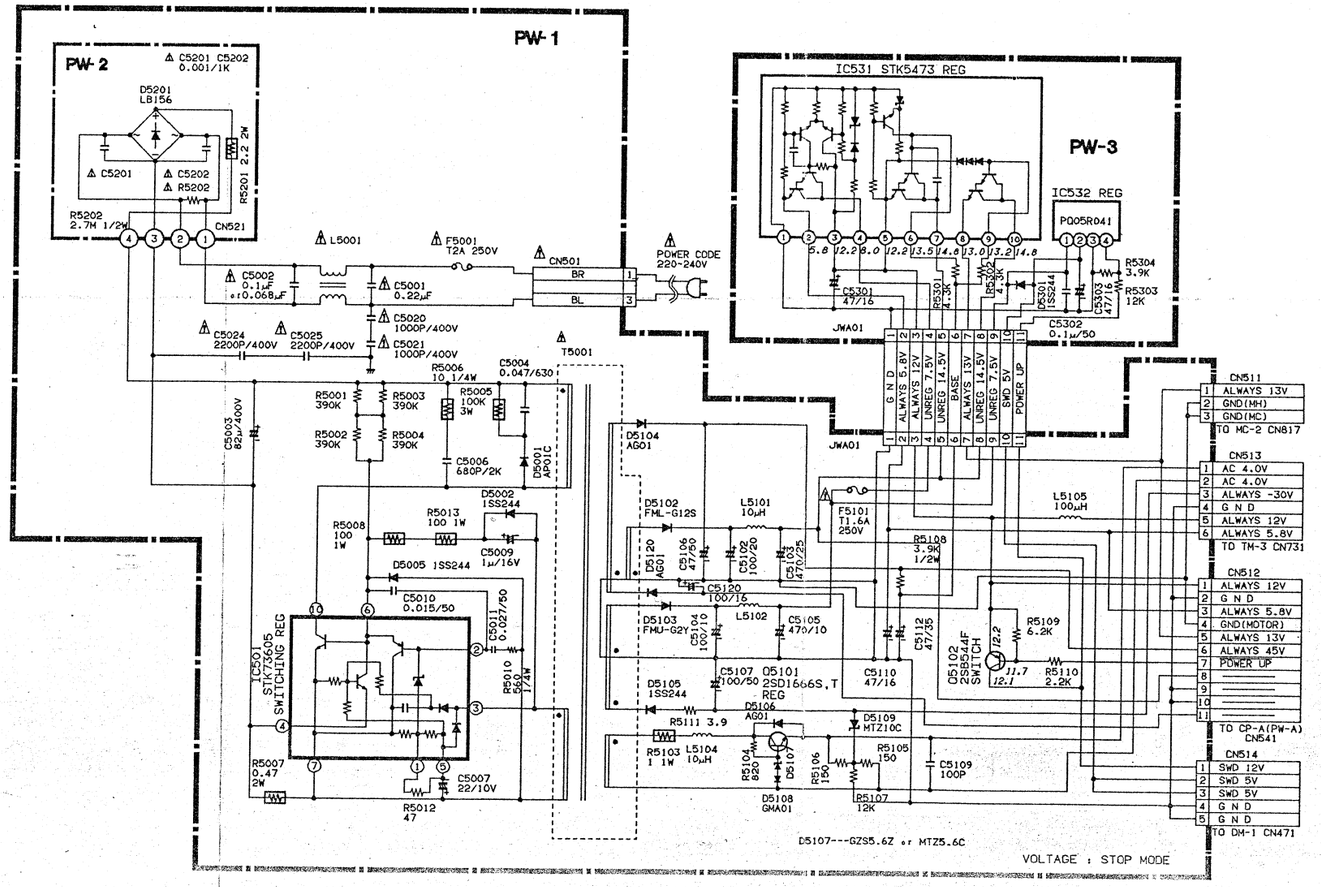

PW-2 POWER SUPPLY

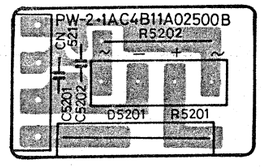

PW-3 POWER SUPPLY

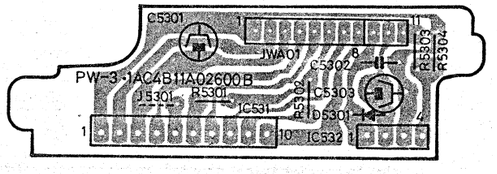

KEY NO.	NORMAL	SHIFT
K1	▶ SLOW	QUICK
K2	■/⏻ STOP,ON/STAND BY	——
K3	MEMORY	RECALL
K4	+ SLOW SPEED	——
K5	- SLOW SPEED	——
K6	TV SCAN	——
K7	STROBE	ART
K8	RELEASE	——
K9	▶▶ FF	——
K10	▶ PLAY	——
K11	COLOUR SATURATION +	——
K12	◀◀ REW	◀◀-▶▶ AUTO PLAY
K13	▮▮ PAUSE/STILL	——
K14	⏻ TV ON/OFF	——
K15	COLOUR SATURATION -	——
K16	VOLUME -	——
K17	MARK	——
K18	● A.DUB	——
K19	● INSERT	——
K20 K21	● REC	——
K23	PIP	ZOOM
K24	VOLUME +	——
K25	MEM/REP	——
K26	RESET	——
K27	→ CH UP	20 (TV)
K28	← CH DOWN	10 (TV)
K29	0	0/AV (TV)
K33	C.DISP	——
K34	CH/AV	——
K35	9	9 (TV)
K36	8	8 (TV)
K37	7	7 (TV)
K41	AUTO TRACKING	——
K42	VPS	——
K43	6	6 (TV)
K44	5	5 (TV)
K45	4	4 (TV)
K49	SP/LP	AUDIO
K50	RECALL	
K51	3	3 (TV)
K52	2	2 (TV)
K53	1	1 (TV)
K57	TRANS	——
K58	PROG	CLOCK
K59	SEARCH	——
K60	SPECIAL	——
K61	SHIFT	

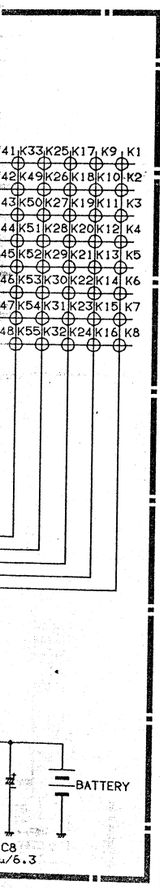

TM-1 Bedienteil, Anzeige, Timer
DISPLAY, TIMER, TUNING CONTROL

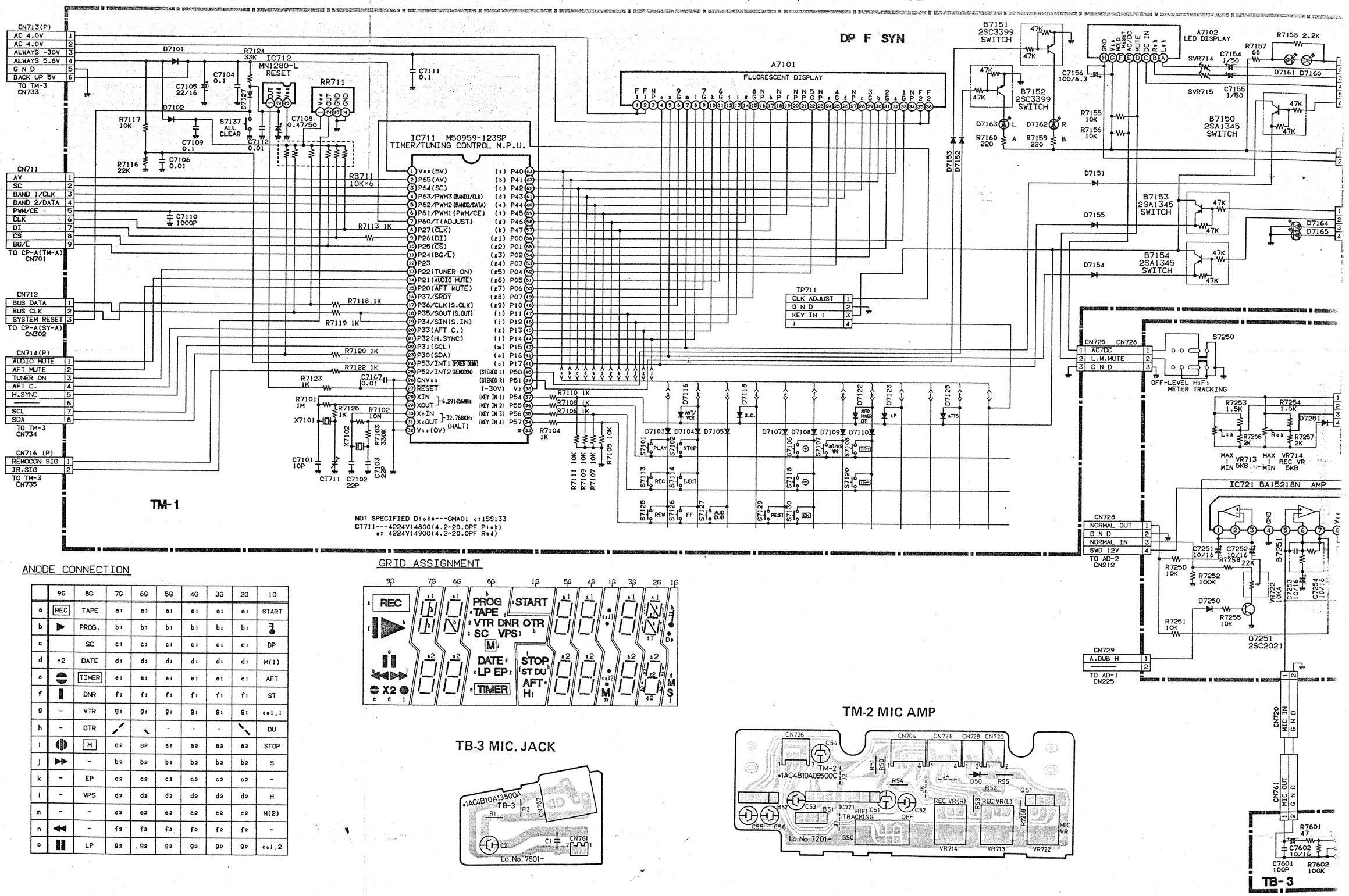

TM-1

ANODE CONNECTION

	9G	8G	7G	6G	5G	4G	3G	2G	1G
a	REC	TAPE	a1	a1	a1	a1	a1	a1	START
b	▶	PROG.	b1	b1	b1	b1	b1	b1	♪
c		SC	c1	c1	c1	c1	c1	c1	DP
d	×2	DATE	d1	d1	d1	d1	d1	d1	M(1)
e	⊖	TIMER	e1	e1	e1	e1	e1	e1	AFT
f	▌	DNR	f1	f1	f1	f1	f1	f1	ST
g	-	VTR	g1	g1	g1	g1	g1	g1	col.1
h	-	OTR	／	＼	-	-	-	＼	DU
i	◐	M	a2	a2	a2	a2	a2	a2	STOP
j	▶▶	-	b2	b2	b2	b2	b2	b2	S
k	-	EP	c2	c2	c2	c2	c2	c2	-
l	-	VPS	d2	d2	d2	d2	d2	d2	H
m	-	-	e2	e2	e2	e2	e2	e2	M(2)
n	◀◀	-	f2	f2	f2	f2	f2	f2	-
o	▮▮	LP	g2	.g2	g2	g2	g2	g2	col.2

GRID ASSIGNMENT

TB-3 MIC. JACK

TM-2 MIC AMP

TM-3 Synchrontrennung, IR - Empfänger, VPS
TUNING CONTROL & TV REMOTE

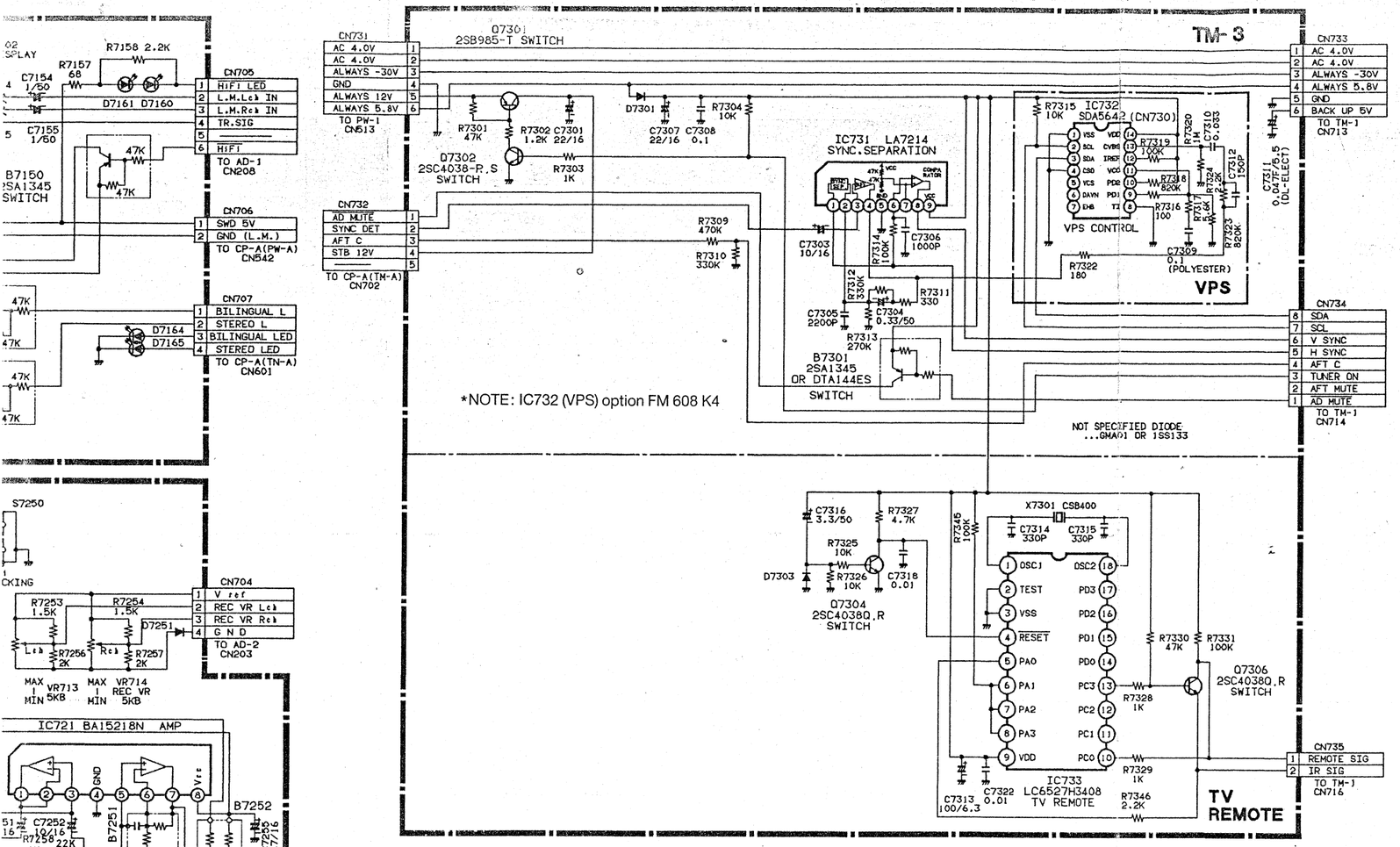

TM-A (CP-A) Abstimmung
TUNING SELECT

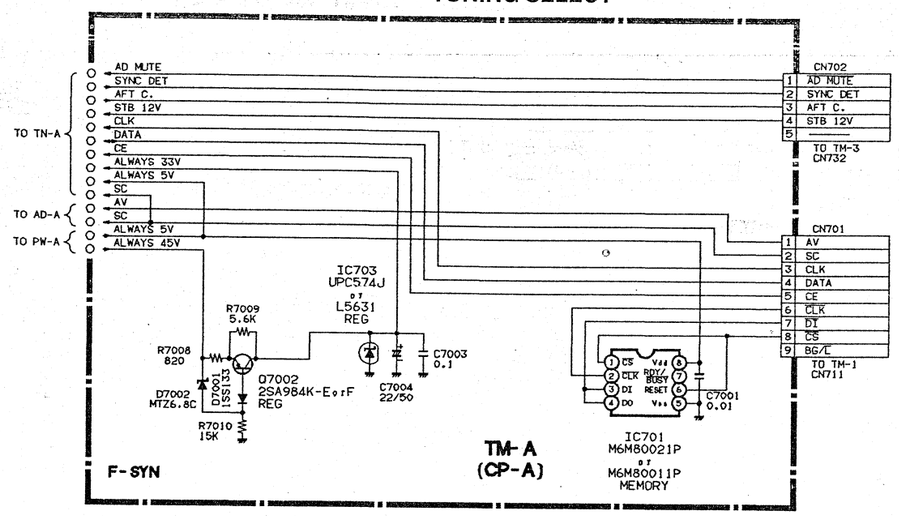

CP-A TUNING SELECT

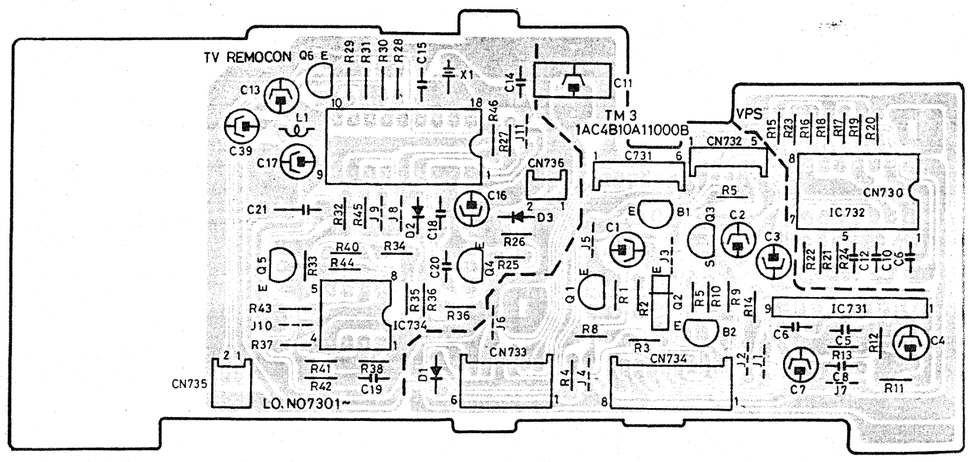
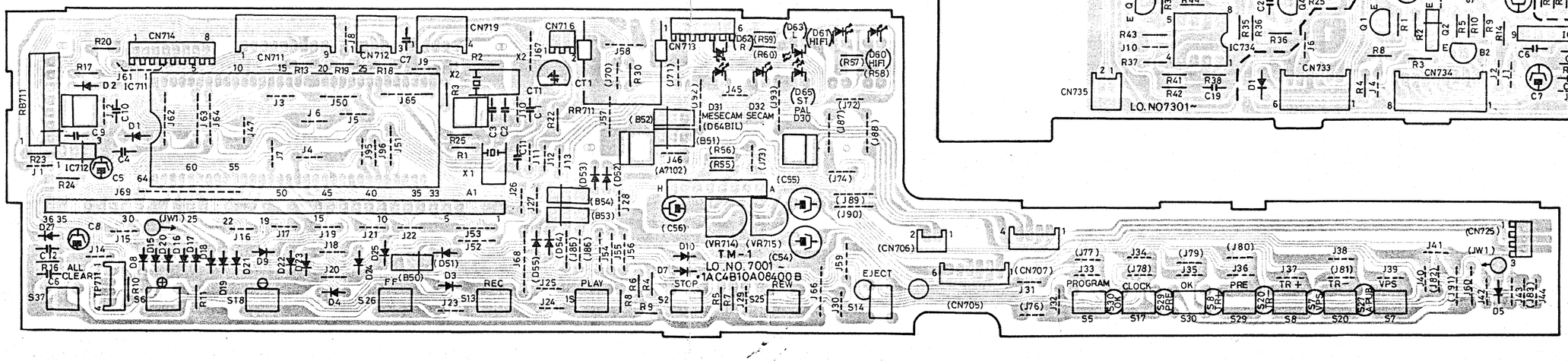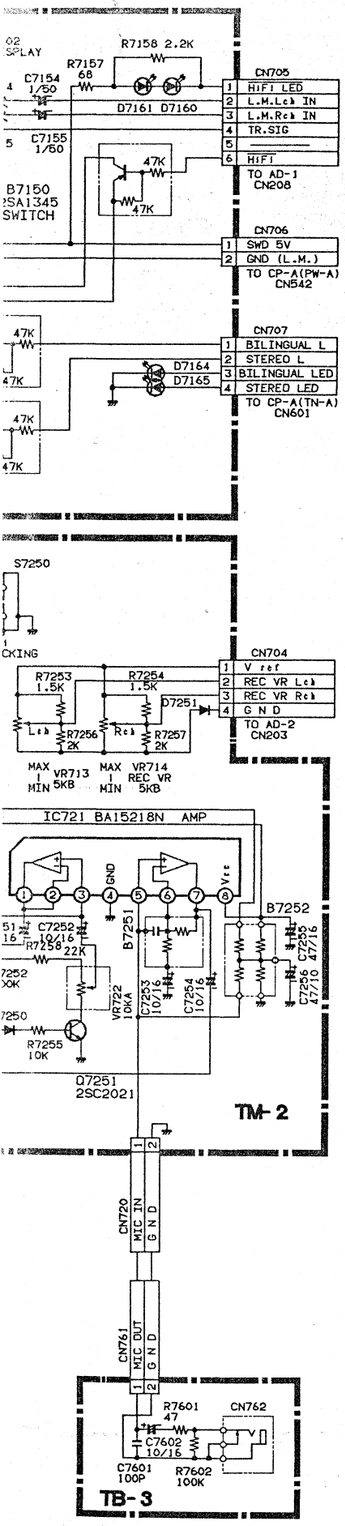
TM-1 DISPLAY, TIMER & TUNING CONTROL